Pre-normative research for safety of hydrogen driven vehicles and transport through tunnels and similar confined spaces

Fuel Cells and Hydrogen Joint Undertaking (FCH JU)
Grant Agreement Number 826193

Deliverable D3.1
Detailed research programme on hydrogen fires in confined structures

Lead authors: DTU (F. Markert, L. Giuliani, L.S. Sørensen)
Contributing authors: UU (D. Cirrone, V. Shentsov, D. Makarov, V. Molkov)
KIT (Z. Xu, M. Kuznetsov)
USN (A. V. Gaathaug)
HSE (R. Brade, K. Moodie, W. Rattigan)
NCSRD (A. Venetsanos, G. Momferatos)
URS (P. Russo)
CEA (D. Bouix)
PS (J. Grune)

Version: 191129
Delivery date for internal review: 1 November 2019
Due date: 30 November 2019
Dissemination level: Public

Deliverable administration					
Work Package	WP3. Thermal and pressure effects of hydrogen jet fires and structure integrity				
N. and title	D3.1. Detailed research programme on hydrogen fires in confined structures (D8)				
Type	Report				
Status	Draft/Working/**Released**	Due	M9	Date	30-11-2019
Comments					

Development and revision			
Version N.	Date	Authors	Description
190920	20-09-2019	D. Cirrone V. Shentsov M.Makarov V. Molkov	UU contribution
	18-10-2019	Z. Xu M. Kuznetsov J. Grune	KIT & PS contribution
	18-10-2019	A V. Gaathaug	USN contribution
	29-10-2019	R. Brade K. Moodie W. Rattigan	HSE contribution
	31-10-2019	D. Bouix	CEA contribution
	31-10-2019	A Venetsanos G. Momferatos, P. Russo	NCSRD & URS contribution
191029	29-10-2019	F. Markert L. Giuliani L.S.Sørensen	DTU contribution
191101	01-11-2019	F. Markert	Compilation of D3.1
191120	20-11-2019	D. Cirrone	Internal review
191121	21-11-2019	D. Bouix	Internal review
191121	21-11-2019	A.V.Gaathaug	Corrections to 3.4.1 & 3.4.2
191120	29-11-2019	W. Rattigan	Corrections to 3.3.4
191129	29-11-2019	F. Markert	Final compilation

Disclaimer

Acknowledgments

This project has received funding from the Fuel Cells and Hydrogen 2 Joint Undertaking (JU) under grant agreement No 826193. The JU receives support from the European Union's Horizon 2020 research and innovation programme and United Kingdom, Germany, Greece, Denmark, Spain, Italy, Netherlands, Belgium, France, Norway, Switzerland.

Summary

The document presents the detailed research plan for WP 3 activities concerning a) engineering tools development to be performed within sub-task 3.2 b) numerical simulations to be performed within sub-task 3.3 and c) experiments to be performed within sub-task 3.4.

All partners detailed their respective activities (see Table 1) and coordinated the actions with each other to achieve maximum synergy across the different tasks. This was done in regard to assign experiments for validation of modelling activities and to use the results and findings from laboratory scale experiments to design large scale experiments. The overall schedule of activities may be found in Table 2.

Keywords

Hydrogen, tunnel, fire, CFD, experimental, tool kit, spalling, steel, concrete, erosion, TPRD performance

Table of contents

Abbreviations

ACH	Air Change per Hour
AG	Aggregates
BOS	Background-Oriented Schlieren
CFD	Computational Fluid Dynamics
DoA	Description of Actions
EDC	eddy dissipation concept
FA	Fly Ash
FDS	Fire Dynamics Simulator
FEM	Finite Element Method
GA	Grant Agreement
HPV	Hydrogen Powered Vehicle
HRR	Heat Release Rate
M	Month
MC	Microsilica
P&ID	Piping & Instrumentation Diagram
PL	Plastizicer
PM	Project Meeting
PNR	Pre-Normative Research
PP	Polypropylene
PPP	Pressure Peaking Phenomena
PRD	Pressure Relief Device
RANS	Reynolds-averaged Navier–Stokes equations
RCS	Regulations, Codes and Standards
SAB	Stakeholders Advisory Board
tEC	the Executive Committee
tGA	the General Assembly
TPRD	Thermally activated Pressure Relief Device
W/C	Water/Cement ratio
WP	Work Package

Definitions

Accident is an unforeseen and unplanned event or circumstance causing loss or injury.

Hazard is any potential source or condition that has the potential for causing damage to people, property and the environment.

Hazard distance is a distance from the (source of) hazard to a determined (by physical or numerical modelling, or by a regulation) physical effect value (normally, thermal or pressure) that may lead to a harm condition (ranging from “no harm” to “max harm”) to people, equipment or environment.

List of figures

List of tables

1. Introduction and scope

The application of hydrogen driven vehicles as well as transport of hydrogen gas through underground traffic systems, as tunnels and underground car parks, requires an extensive pre-normative research to ensure an acceptable level of risk for people, property and environment. As evinced in the HyTunnel-CS deliverable D1.2 "Report on hydrogen hazards and risks in tunnels and similar confined spaces", a number of knowledge gaps needs to be solved to ensure an inherently safer systems approach during the deployment of hydrogen-powered vehicles. In case of an external fire heating a vehicle's hydrogen tank, the Thermally activated Pressure Relief Device (TPRD) should open to vent the compressed hydrogen gas and prevent the failure of the tank. The vented hydrogen is likely to ignite, due to the fire surrounding the tank, producing a jet fire.

This report presents the detailed research programme to be conducted on hydrogen fires in confined structures within Work Package 3 (WP). The engineering tools, numerical studies and experimental campaign will be described, specifying the aim of each activity, the addressed knowledge gaps, the interconnections with HyTunnel-CS work plan and the implementation plan. The present programme was established on the current State-of-the-Art and consortium knowledge. However, the programme may be updated during the project course according to new developments, findings and strategic advises from the Stakeholders Advisory Board (SAB). The scope of WP3 is to address the safety knowledge gaps regarding hydrogen jet fires thermal and pressure loads that may cause harm to people or damage the confined space structure. The final aim is to provide innovative prevention and mitigation strategies to be included in recommendations for Regulations, Codes and Standards (RCS).

A first step to the preparation of this report was given by Milestone 5 "Matrix of experiments, simulations, schedule of tools development", which presented a first version of the research programme. Milestone is included in the present report (Appendix 1) as indicated by the Grant Agreement.

2. Work Package overview

Work Package 3 focuses on the investigation of the thermal and pressure effects produced by hydrogen jet fires in confined spaces. The following sections aim at presenting the objectives of WP3, the addressed knowledge gaps and an overview of the WP structure.

2.1 Objectives

The Work Package has the following objectives, as identified in HyTunnel-CS Grant Agreement (GA):

1. Improve the principal understanding of hydrogen jet fire on life safety provisions in underground transportation systems and their structural integrity.
2. Generate unique experimental data to support further development and validation of relevant physics models, simulations, hazard and risk assessment tools.
3. Perform numerical simulations to support the experimental campaign and get insights into hydrogen jet fire effects on life safety, property and environment protection.
4. Develop novel engineering correlations for fire safety engineering in underground transportation systems and similar confined spaces with presence of hydrogen vehicles.
5. Study thermal effects of hydrogen fire on structure integrity, erosion of road and lining materials and spalling of concrete.
6. Identify and evaluate innovative safety strategies and engineering solutions to prevent and mitigate consequences of hydrogen jet fires in underground transportation systems.
7. Underpin key Regulations, Codes and Standards (RCS) outputs and recommendations for inherently safer use of hydrogen vehicles in underground transportation systems by Pre-Normative Research (PNR) on hydrogen fires.

2.2 Knowledge gaps and scenarios addressed

A critical review of the state of the art was conducted in HyTunnel-CS D1.2 "Report on hydrogen hazards and risks in tunnels and similar confined spaces". The aim was to define the areas where safety knowledge gaps and technological bottlenecks for characterisation of hazards and associated risks in tunnels are present. The outcomes of D1.2 are used to shape the experimental campaigns, analytical and numerical studies in WP3 to address the areas where the current knowledge is insufficient to calculate hazards and risks of hydrogen-powered vehicles and transport in tunnels and other confined spaces. In particular, WP3 addresses the scenario involving hydrogen jet fires and their interaction with a car fire dynamics and the confined space systems, whether this is the ventilation or the fire suppression systems. The research will focus on hydrogen jet fires in tunnels and other confined spaces, e.g. garages, underground car parks, etc.

2.3 Structure and synergy with HyTunnel-CS work plan

Work Package 3 is structured in 5 tasks as follows:

- Task 3.1. This task aims at designing the research programme of WP3 on the basis of the knowledge gaps and current needs of hydrogen transportation in underground systems and resistance of their structure to fire exposure. WP3 work plan combines analytical, numerical and experimental studies to expand the current state of the art and fulfil the knowledge gaps in this area. The Stakeholders Advisory Board (SAB) has been involved to provide a strategic advise on the refinement of the work plan and ensure that the research priorities meet the needs of industry and regulators.
- Task 3.2. This task focuses on the development of analytical studies and engineering tools to be used in hydrogen safety engineering. The engineering correlations will be validated against experiments available in literature or performed within HyTunnel-CS experimental campaign in task 3.4. As a consequence, partners involved in task 3.2 will closely collaborate with experimentalists to design experiments and assure that the data required for validation will be obtained through the performed tests. The tools developed within this task will be part of the guidelines and recommendations for RCSs developed within WP6.
- Task 3.3. This task aims at the development and validation of computational fluid dynamics (CFD) models against experiments conducted in task 3.4. Numerical studies often allow to simulate scenarios that cannot be represented by the assumption of engineering correlations. Furthermore, CFD studies may give further insights into the dynamics and additional hazards of an accident. Also in this case, a close collaboration between modellers and experimentalists has been ensured with two purposes: conduction of pre-test simulations for designing the tests to be conducted and refinement of the experimental set-up and parameters to meet the modelling needs.
- Task 3.4. This task focuses on the conduction of the experimental programme. The aim of experiments is to establish a scientific basis and generate experimental data to support hazard and risk assessments. This task will provide the fundamental data for validation of the engineering tools and CFD models developed in task 3.2 and 3.3, respectively. As mentioned in description of task 3.2 and 3.3, a close collaboration between modellers and experimentalists has been ensured to optimise and refine the design of experiments.
- Task 3.5. This task aims at gathering the knowledge and outcomes achieved in tasks 2, 3 and 4 and prepare the intermediate and final reports, respectively D3.2 and 3.3, on analytical, numerical and experimental studies on fires, including innovative prevention and mitigation studies.

Table 1 gives an outlook of the structure of the WP, tasks and corresponding sub-tasks.

Table 1. Structure of WP3.

Title (leader)
Task 3.1. Programme of research (DTU)
Task 3.2. Analytical studies, development and validation of engineering tools (UU)
Sub-task 3.2.1. PPP correlation for jet fires (UU)
Sub-task 3.2.2. Fire suppression by water sprays and O_2 depletion (KIT)
Sub-task 3.2.3. Mechanical ventilation in underground parking (UU)
Task 3.3. Numerical studies (NCSRD)
Sub-task 3.3.1. Pressure Peaking Phenomenon CFD model (UU)
Sub-task 3.3.2. Fire in ventilated underground parking (NCSRD)
Sub-task 3.3.3. CFD/FEM modelling of fires effect on structures (DTU, *UU*)
Sub-task 3.3.4. Fire spread scenarios in underground spaces (DTU)
Task 3.4. Experiments (CEA)
Sub-task 3.4.1. Pressure Peaking Phenomenon for hydrogen jet fires (USN)
Sub-task 3.4.2. TPRD fire effect on vehicle, structure and evacuation (USN)
Sub-task 3.4.3. Fire effect on structure integrity and concrete spalling (DTU)
Sub-task 3.4.4. Fire effect on erosion of road materials and lining (HSE)
Sub-task 3.4.5. Effect of TPRD fire on vehicle fire dynamics in tunnel (CEA)
Sub-task 3.4.6. Effect of water sprays on mitigation of hydrogen jet fires (PS)
Task 3.5. Reports on hydrogen jet fire effects and safety strategies (DTU, All)

Table 2 reports the summarised timeline for the development of analytical and numerical models, and execution of the experimental programme.

Table 2. Overall time planning of tasks 3.2, 3.3, 3.4.

Task 3.2. Analytical studies, development and validation of engineering tools (UU)		
Sub-task 3.2.1 - PPP correlation for jet fires (UU)	***Due date***	***Report at project meeting (PM)***
(1) Text of PPP tool for recommendations (v.1) (2) Implementation of the tool (3) Text of PPP tool for recommendations (v.2) (4) Validation of the tool by HyTunnel-CS experimental data a. Experimental matrix: 16 tests, 8 releases and 8 jet-fires b. Validation of both PPP tools to be done (5) Text of PPP tool for recommendations (v.3)	M8 M12 M14 M30 M31	3rd PM - Feb '20 (M12) 6th PM - Sep '21 (M31)
Sub-task 3.2.1 - Fire suppression by water sprays and O2 depletion (KIT)	***Due date***	***Report at project meeting (PM)***
Completion of sub-task 3.2.2	M31	6th PM - Sep '21 (M31)
Sub-task 3.2.3 - Mechanical ventilation in underground parking (UU)	***Due date***	***Report at project meeting (PM)***
(1) Problem formulation (draft)	M10	3rd PM - Feb '20 (M12)
(2) Preliminary studies of TPRD jet fire contribution to car fire HRR: different TPRD diameters, 700bar, car park scale in terms of Air Changes per Hour (ACH) and car fire HRR	M12	3rd PM - Feb '20 (M12)
(3) Modelling tool implementation (final), refining experimental scenarios with USN	M13	7th PM - Feb '22 (M36)

(4) Validation of the tool against USN experiments within Task 3.4.2 (expected M30)	M31	6th PM - Sep '21 (M31)
(5) Use of the engineering tool to assess current ventilation standards	M32	7th PM - Feb '22 (M36)
(6) Description of the tool for stakeholders' use, compilation of recommendations	M33	7th PM - Feb '22 (M36)
Task 3.3. Numerical studies (NCSRD)		
Sub-task 3.3.1 - Pressure Peaking Phenomenon CFD model (UU)	***Due date***	***Report at project meeting (PM)***
(1) Problem formulation and preliminary simulations	M14	4th PM - Sep '20 (M19)
(2) Validation of the model against low pressure source experiments performed by USN in subtask 3.4.1 (M16)	M17	4th PM - Sep '20 (M19)
(3) Validation of the model against experiments performed by USN in subtask 3.4.1 (M30) with high pressure source 700 bar	M32	7th PM - Feb '22 (M36)
Sub-task 3.3.2 - Fire in ventilated underground parking (NCSRD)	***Due date***	***Report at project meeting (PM)***
Validation of CFD model based on experiments	M24	5th PM – Feb '21 (M24)
Jet flame CFD simulations in ventilated underground parking	M35	7th PM – Feb '22 (M36)
Sub-task 3.3.3 - CFD/FEM modelling of fires effect on structures (DTU, UU)	***Due date***	***Report at project meeting (PM)***
(0) UU- DTU communication to define activities details and timeline	M8	3rd PM - Feb '20 (M12)
(1) 2D FEM model with nominal fire (DTU)	M24	5th PM - Feb '21 (M24)
(2) CFD simulations of thermal and pressure loads for hydrogen jet fires and passage of results to DTU for FEM modelling (UU)	M26	6th PM - Sep '21 (M31)
(3) FEM with hydrogen jet fire (DTU)	M30	6th PM - Sep '21 (M31)
(4) FEM with refined fire scenarios (DTU)	M35	7th PM - Feb '22 (M36)
Sub-task 3.3.4 - Details of the CFD model development	***Due date***	***Report at project meeting (PM)***
a) Model description of car park types A and B	M12	3rd PM - Feb '20 (M12)
b) Simulation of fire spread involving hydrogen cars (vs.1)	M24	5th PM - Feb '21 (M24)
c) Simulation of fire spread with various spacing and ventilation conditions. Validation using test results from 3.4.2 (vs.2)	M30	6th PM - Sep '21 (M31)
Task 3.4. Experiments (CEA)		
Sub-task 3.4.1 - Pressure Peaking Phenomenon for hydrogen jet fires (USN)	***Due date***	***Report at project meeting (PM)***
Campaign 1. Releases in 15 m^3 volume with lower source pressure (can be reported in intermediate report).	M16	3rd PM - Feb '20 (M12)
Campaign 2. Releases in 15 m^3 volume with 700 bar pressure source	M30	6th PM - Sep '21 (M31)
Sub-task 3.4.2 - TPRD fire effect on vehicle, structure and evacuation (USN)	***Due date***	***Report at project meeting (PM)***
(1) Detailed experimental series finalized before M21	M21	5th PM - Feb '21 (M24)

(2) Experimental results obtained before summer 2021	M30	6th PM - Sep '21 (M31)
Sub-task 3.4.3 - Fire effect on structure integrity and concrete spalling (DTU)	***Due date***	***Report at project meeting (PM)***
(1) Casting of concrete cylinders and hardening (M9-M11)	M11	3rd PM - Feb '20 (M12)
(2) Screening test using the test rig (M11-M13)	M13	4th PM - Sep '20 (M19)
(3) Casting of concrete plates and hardening (M12-M13)	M13	4th PM - Sep '20 (M19)
(4) Laboratory scale testing H-TRIS/Hydrogen jet flames (M14-M16)	M16	4th PM - Sep '20 (M19)
(5) Eventual in-kind jet flame tests at USN	M14	4th PM - Sep '20 (M19)
Sub-task 3.4.4 - Fire effect on erosion of road materials and lining (HSE)	***Due date***	***Report at project meeting (PM)***
(1) Confirm five materials to be tested in discussions with SAB members and partners	M10	3rd PM - Feb '20 (M12)
(2) Commence experimental programme	M14	4th PM - Sep '20 (M19)
(3) Intermediate results	M18	4th PM - Sep '20 (M19)
(4) Final results and conclusions for recommendations	M20	5th PM - Feb '21 (M24)
Sub-task 3.4.5 - Effect of TPRD fire on vehicle fire dynamics in tunnel (CEA)	***Due date***	***Report at project meeting (PM)***
(1) Preparing the pre-test campaign	M11	3rd PM - Feb '20 (M12)
(2) Results of preliminary pre-tests campaign	M19	4th PM - Sep '20 (M19)
(3) Preparing the test campaign	M19	4th PM - Sep '20 (M19)
(4) Intermediate results	M23	5th PM - Feb '21 (M24)
(5) Final results	M31	6th PM - Sep '21 (M31)
Sub-task 3.4.6 - Effect of water sprays on mitigation of hydrogen jet fires (PS)	***Due date***	***Report at project meeting (PM)***
Conclusion of the experimental campaign and results	M31	6th PM - Sep '21 (M31)

3. Detailed research programme

3.1 Outlook

The detailed research programme focuses on tasks 3.2, 3.3 and 3.4 and it follows their structure in sub-tasks (see Table 1). A total of 14 studies will conducted throughout the project duration. The description of each sub-task is adapted to the nature of the activity, i.e. whether it is an analytical study, a numerical simulations or experimental tests. Each description specifies the aim and the knowledge gaps addressed with the proposed action. The responsible for each activity is indicated along the titles, reflecting the Description of Actions (DoA) in the GA. The description of each WP3 activity includes the timeline for the development and fulfilment of the task. The project meetings (PM) will be used to monitor and ensure the timely and proper development of the task stages. Thus, along with the due date for each of the activities, there is indication of the PM at which it will be reported to the General Assembly (tGA) and the Executive Committee (tEC). The activities will be reported in the intermediate and final reports, respectively D3.2 (due date M18) and D3.3 (M36), on analytical, numerical and experimental studies on fires, including innovative prevention and mitigation techniques.

3.2 Analytical studies, development and validation of engineering tools

3.2.1 Sub-task 3.2.1. Correlation for pressure peaking phenomena for jet fires in enclosures (UU)

In this sub-task UU aims to develop and validate the pressure peaking phenomenon model (PPP) for ignited releases of hydrogen (jet fire) in confined spaces with limited ventilation, e.g. residential garages, maintenance shops, cross-passes between tunnels, etc. Brennan et al. (2010) revealed the existence of an “unexpected” peak in the pressure transient during release of a lighter-than-air gas in a vented enclosure for unignited releases of hydrogen, by carrying out theoretical and numerical research. The amplitude and duration of this pressure peak vary depending on the enclosure volume, vent size and leak flow rate. The peak can significantly exceed the steady-state overpressure, which is reached when the enclosure is fully occupied by leaking with a constant hydrogen rate. The PPP can jeopardise a civil structure integrity, if comparatively large diameter of TPRD are used in hydrogen-powered vehicles. This could cause serious life safety and property protection issues that requires development of prevention and mitigation strategies and innovative safety engineering solutions. The PPP model was initially developed for unignited releases of hydrogen. However, the unignited case is less probable and a more complex PPP model for immediately ignited releases is being developed at Ulster.

This model requires thorough validation for real scale confined spaces to be adopted as a reliable predictive tool for hydrogen safety engineering. The developed model has been partially validated against small scale experiments. Validation against large-scale experimental data obtained in sub-task 3.4.1 is planned in this activity.

The pressure peaking phenomenon tool description will be reported in a suitable wording and format for recommendations. A first version of the text will be prepared based on the current knowledge and validation domain. The following step will be the implementation of the tool within one or multiple available platforms, e.g. NET-Tools or Ulster teaching programme of Postgraduate in Continuous Professional Development course. A second version of the text describing the PPP tool will be prepared following the template for recommendations. Next step will be validation of the tool against HyTunnel-CS experiments performed by USN in sub-task 3.4.1. The experimental matrix envisages 16 tests in total, 8 of which for unignited releases and 8 for jet-fires. The final version of text of PPP tool for recommendations will be updated following new large-scale experimental data. The timeline for the programme in presented in Table 3.

Table 3. Timeline of the programme in subtask 3.2.1.

Analytical studies and engineering tool details	Due date	Report at Project Meeting (PM)
(1) Text of PPP tool for recommendations (v.1)	M8	3rd PM - Feb '20 (M12)
(2) Implementation of the tool	M12	
(3) Text of PPP tool for recommendations (v.2)	M14	
(4) Validation of the tool by HyTunnel-CS experimental data	M30	6th PM - Sep '21 (M31)
a. Experimental matrix: 16 tests, 8 releases and 8 jet-fires		
b. Validation of both PPP tools to be done		
(5) Text of PPP tool for recommendations (v.3)	M31	

3.2.2 Sub-task 3.2.2. Hydrogen fire suppression systems by water sprays and oxygen depletion (KIT)

The hot products of hydrogen combustion in a confined space can be cooled down by the water spray of fire suppression systems. However, the water spray may intensify turbulence and consequently enhance hydrogen combustion and the resulting heat release rate. The suppression effects of water spray or oxygen depletion on hydrogen fire will be studied theoretically by analytical or numerical calculations. The scope of the study will be to assess the mass flow rate of water able to cool down the combustion products originated by a hydrogen mass flow rate to an acceptable level to control fire and facilitate evacuation and rescue operations.

A zero-dimensional lump parameter code or even a more advanced computer code like Fire Dynamics Simulator (FDS) developed by NIST will be adopted to analyse hydrogen fires with involvement of water sprays, or in oxygen starving conditions. Calculations will consider hydrogen fires in different scales, corresponding to different leaking mass flow rates of hydrogen, and their suppression by water sprays with different features, such as a varying mass flow rate of water injection, and/or different droplet sizes, etc.

<u>Planned matrix</u>

A simplified 2D or 3D tunnel section is modelled with a given hydrogen fire in the domain. The gas temperature and /or gas compositions will be computed with water spray model on or with a depleted oxygen fraction, i.e., less than 21 vol. % in normal air.

The simulation cases are gathered in Table 4. The thermal dynamic parameters of the gas in the control volumes, e.g., temperature and steam fraction, will be calculated. These computation results are used to assess whether the environment in the tunnel is suitable for fire control, evacuation and rescue operations for a given hydrogen fire and a given water spray or oxygen depletion condition.

Table 4. Calculation cases of hydrogen fires suppressed by water sprays or oxygen depletions.

	Water spray				Oxygen depletion		
	Small mass flow rate of water		Large mass flow rate of water		Slight starving of O_2	Medium starving of O_2	Serious starving of O_2
	Small droplet	Large droplet	Small droplet	Large droplet			
Small mass flow rate of H_2	1	3	5	7	a	c	e
Large mass flow rate of H_2	2	4	6	8	b	d	f

Table 5. Time schedule of subtask 3.2.2.

Analytical studies and engineering tool development	Due date	Report at Project Meeting (PM)
Completion of sub-task 3.2.2	M31	6th PM - Sep '21 (M31)

3.2.3 Sub-task 3.2.3. Mechanical ventilation of hydrogen jet fire in underground parking (UU)

This engineering tool will be developed along with a tool to assess mechanical ventilation in an underground parking for unignited releases (Task 2.2). In the scenario involving an ignited release, a vehicle fire may be aggravated by the heat release rate of the hydrogen jet fire. On the other hand, the water vapour produced by the hydrogen-air combustion may act as an extinguishing agent. The engineering tool will help to assess whether the current ventilation standards for underground parking in case of a vehicle fire is still applicable in the event of hydrogen jet fire from a vehicle TPRD or if the hydrogen jet fire will aggravate the vehicle fire hazards. This latter eventuality depends on the ventilation parameters imposed in the enclosed space and hydrogen release rate through the TPRD.

The model will be based on balance between the volume of gas consumed and produced by the hydrogen combustion, the volume of hydrogen inlet by the TPRD and the volume of gas exchanged through the ventilation system. The model will require as input parameters:

- TPRD/leak release temperature, pressure, diameter and mass flow rate;
- Vehicle fire heat release rate and combustion products volume, if applicable;
- Ventilation rate;
- Enclosure/Confined space volume.

The engineering tool can be used in two ways and provide output in the form of:

- required ventilation parameters for a certain vehicle TPRD release;
- maximum mass flow rate through a vehicle TPRD to fulfil the ventilation requirements.

Table 6. Timeline and milestones of the reduced model development in sub-task 3.2.3.

Analytical studies and engineering tool details	Due date	Report at Project Meeting (PM)
(1) Problem formulation (draft)	M10	3rd PM - Feb '20 (M12)
(2) Preliminary studies of TPRD jet fire contribution to car fire HRR: different TPRD diameters, 700bar, car park scale in terms of Air Changes per Hour (ACH) and car fire HRR	M12	3rd PM - Feb '20 (M12)
(3) Modelling tool implementation (final), refining experimental scenarios with USN	M13	7th PM - Feb '22 (M36)
(4) Validation of the tool against USN experiments within Task 3.4.2 (expected M30)	M31	6th PM - Sep '21 (M31)
(5) Use of the engineering tool to assess current ventilation standards	M32	7th PM - Feb '22 (M36)
(6) Description of the tool for stakeholders' use, compilation of recommendations	M33	7th PM - Feb '22 (M36)

3.3 Numerical studies

3.3.1 Sub-task 3.3.1. CFD model for predictive simulation of pressure peaking phenomenon for hydrogen jet fire in confined space (UU)

A CFD model will be developed and validated to assess the overpressure hazards generated from Pressure Peaking Phenomenon for hydrogen jet fire in a large scale enclosure with dimensions similar to those of a garage. The reasons to have a validated CFD model together with the engineering tool developed in sub-task 3.2.1 are the following:

- to simulate those scenarios that cannot be represented by the engineering tool assumptions;
- to expand the range of applicability of the engineering model by using simulations as verification tool;
- to calculate the thermal load on the enclosure surfaces;
- to calculate hazard distances based on pressure and thermal effects in the external surroundings of the enclosure.

3.3.1.1 Description of the CFD model

The CFD model to predict pressure peaking phenomenon for hydrogen jet fire in confined space was developed by Hussein et al. (2018) and validated for small-scale experiments. Here, it will be validated against experiments performed by USN within Task 3.4 (M30) on large scale scenarios (15 m^3 enclosure). The CFD model is based on an implicit pressure-based solver. A RANS approach is employed for turbulence modelling and the Eddy Dissipation Concept for combustion. The Discrete Ordinates model is implemented to take into account radiation losses. The notional nozzle approach is used to model the under-expanded hydrogen jet in simulations (Molkov et al., 2019). The simulation will be conducted on the ANSYS Fluent platform.

In the stage of the problem formulation and model details definition, few preliminary simulations will be conducted on one case selected from the low pressure tests set and one from the high pressure set. The simulations will assess the sensitivity of the CFD model to grid and time step, for a total of 4 CFD preliminary simulations.

3.3.1.2 Validation of the CFD model

The validation process of the CFD model will have two stages. Firstly, the model will be validated against the lower pressure source experiments performed by USN in sub-task 3.4.1 (completed in M16). The current plan involves 3 CFD simulations. A proposal of the experimental tests to be used for validation is given in Table 7 as Tests 1, 2 and 3. Specifications of the tests will be defined in collaboration with experimentalists. This first set of simulations will be completed in M17. The second set envisages other 3 simulations on the experiments performed with high pressure source 700 bar by USN in sub-task 3.4.1 for different release source and vent area. Experiments will be completed in M30, thus simulations are expected to be available for M32. Table 7 shows an estimation of the maximum overpressure as calculated according to the theory available in Makarov et al. (2018).

Table 7. Proposal for experimental tests in sub-task 3.4.1 to be simulated for CFD model validation.

Test	Pressure, bar	Diameter, mm	Mass flow rate, kg/s	Vent area, m^2	Max ΔP, kPa
1	Low	0.3	0.02	0.08 (0.4x0.2)	5.4
2	Low	0.3	0.02	0.06 (0.2x0.2)	8.5
3	Low	0.3	0.01	0.04 (0.2x0.2)	5.5
4	700	0.3	$2.4 \cdot 10^{-3}$	12.3x12.3 cm (3 pipes)	2.5
5	700	0.3	$2.4 \cdot 10^{-3}$	10x10 cm (2 pipes)	5
6	700	0.5	$6.7 \cdot 10^{-3}$	12.3x12.3 cm (3 pipes)	12.7

The experimental measurements and data needed for the CFD model validation are the following:

- Release conditions: T, P, diameter and hydrogen mass flow rate;
- Ambient conditions;
- Enclosure geometry and material properties to accurately calculate heat transfer;
- Vent dimensions and volumetric flow rate;
- Pressure load: pressure sensors in different locations of the enclosure;
- Thermal load: temperature and heat flux sensors;
- Pressure and temperature sensors outside the vent.

Overall, the CFD tool development will have the timeline and milestone steps showed in Table 8.

Table 8. Timeline of the CFD model development within sub-task 3.3.1.

Details of the CFD model development	Due date	Report at Project Meeting (PM)
(1) Problem formulation and preliminary simulations	M14	4th PM - Sep '20 (M19)
(2) Validation of the model against low pressure source experiments performed by USN in subtask 3.4.1 (M16)	M17	4th PM - Sep '20 (M19)
(3) Validation of the model against experiments performed by USN in subtask 3.4.1 (M30) with high pressure source 700 bar	M32	7th PM - Feb '22 (M36)

3.3.2 Sub-task 3.3.2. CFD model of hydrogen non-pre-mixed turbulent combustion in scaled underground parking with mechanical ventilation (NCSRD)

The numerical studies in sub-task 3.3.2 address the scenario involving hydrogen non-premixed combustion in underground parking provided with mechanical ventilation. The work will be structured in the following steps:

a) further development of ADREA-HF code for jet fires and radiation;
b) validation simulations against selected URS experiments (see description below);
c) simulations for hydrogen jet fires in selected ventilated underground parking scenarios.

Combustion modelling will be based on the eddy dissipation concept (EDC) by Magnussen and Hjertager (1977). Radiative transfer modelling will be implemented through the P1 model, which is the simplest instance of the general spherical harmonics method for the solution of the radiative transfer equation in a participating medium (Modest, 2013). If deemed necessary, modelling will proceed with the far more complex discrete ordinates method.

The validation work will be based only on tests without action of extinguishing powder and is planned to be completed by months 22-24. Once the CFD model has been validated, simulations will be performed for hydrogen jet fires in ventilated underground parking. The whole work will be documented in the final deliverable D3.3 (M36).

Table 9. Timeline of the CFD model development within sub-task 3.3.2.

Details of the CFD model development	Due date	Report at Project Meeting (PM)
Validation of CFD model based on experiments	M24	5th PM – Feb '21 (M24)
Jet flame CFD simulations in ventilated underground parking	M35	7th PM – Feb '22 (M36)

3.3.2.1 Description of URS experimental campaign

URS experiments (see Table 10) were carried out in collaboration between URS and the Italian National Fire Corps (in-kind contribution from Italian National Fire Corps). The jet fire experiments were

performed in open space at hydrogen pressures up to 450 bar and nozzle diameters 1-5 mm. The aim of the experiments was to evaluate the hazard distances from the hydrogen jet fires and to test the mode of action of extinguishing powder. The nozzle was located at 1.03 m height from the ground and at a distance of 11.8 m from the tank exit (pipeline diameter 1/2").

Temperature was measured by thermocouples at different distances (up to 8 m) along the jet-axis, at 0.35 m distance (by the jet-axis) in perpendicular direction, and at height of 0.4 m, 1.03 m and 2.10 m. One temperature measurement was also performed in the centre of the jet at 1 m distance along the jet axis and 1.03 m height. The jets were also visualized by a thermal camera (max temperature 650°C) and a video camera.

No heat radiation flux sensors were used, instead, the temperature of small pieces of stainless steel sheet (0.05 m x 0.05 m, 2 mm width) facing the jet was measured. The pieces were located at 2 m distance from the jet-axis in perpendicular direction, at 2 m, 3 m and 4 m from the nozzle along the jet axis, and at 1 m height.

A selection of tests is going to be repeated in the near future (planned for end of 2019), which will employ a thermal camera up to 2000°C as well as radiation flux sensors.

Table 10. Matrix of experimental campaign performed by the Italian National Fire Corps in collaboration with URS.

TEST#	TEST Code	exstinguishing powder	nozzle diameter (mm)	test duration (s)	P_initial (bar)	P_final (bar)	wind velocity (m/s)	Wind direction	Ambient Temperature (°C)
1	P518125A	no	5	18	125	120	2	22°N	14.7
2	P515120A	yes	5	25	120	90	2	N	13
3	P53090A	yes	5	30	90	45	1.5	N	14
4	P315450A	yes	3	30	450	360	2	N	15
5	P315450B	no	3	15	450	380	2	N	15
6	P315380C	yes	3	18	380	340	2	N	16
7	P315340D	no	3	15	340	300	1	N	16
8	P315300E	no	3	15	300	270	2	N	16
9	P520270F	yes	5	20	270	230	2	N	16.5
10	P520240G	no	5	20	230	190	0.5	N	17
11	P115370H	no	1	16	370	360	1.7	N	17
12	P115360I	yes	1	15	360	360	1	N	17
13	P115360J	no	1	15	360	350	0.5	N-W	18
14	P115350L	yes	1	15	350	340	0.5	N	18
15	P520340M	yes	5	20	340	270	0		18
16	P315270N	yes	3	15	270	240	0		18
17	P315240O	yes	3	15	240	220	1	N	19
18	P315220P	yes	3	15	220	200	0.5	N	18

3.3.3 Sub-task 3.3.3. Coupled CFD/ FEM modelling of the structures reaction to fire (DTU, UU)

This sub-task is aimed at showcasing a method for an integrated use of CFD and FEM models for the safety assessment of structures exposed to hydrogen fires. The actions described in the Grant Agreement addressed the response of steel elements in tunnel to thermal and pressure loads following a confined space accident. In a first stage, an investigation of the steel structures likely to be present in a tunnel was carried out. The aim was to identify which elements may be affected by hydrogen jet fires to a degree that could undermine the structural integrity of the tunnel and the rescue and evacuation operation. Members of the Stakeholders Advisory Board (SAB) who are involved in the construction and design of tunnels have been engaged in this process. The consultation was a fundamental step to determine the current practical needs and interests of tunnel safety practitioners to be addressed by this analysis.

The method was suggested to be applied to a simplified model of steel fire door that can be used in tunnels, car park buildings, as well as private garages, but can be extended to other steel structures

existing in tunnels, such as fans casing, suspension trays for electric cables or the pipework of the fire suppression systems. Nevertheless, concrete is the primary structural material used in tunnels. Maintaining the concrete structural integrity is essential to avoid hindrance of evacuation and rescue operations, as well as onerous repairs to the tunnel construction. At the current stage, the CFD/FEM modelling of concrete objects response to hydrogen jet fires is deemed to be more relevant and is suggested as priority of this sub-task. Furthermore, a substantial effort of the experiments performed in Task 3.3 is devoted to concrete structural materials made from concrete, providing a wide set of tests that can be used for validation.

The method for integrating CFD and FEM models can in principle also be extended to concrete structure, although the higher complexity of the material behaviour and higher computational onus of the mechanical solution make the task less immediate. The description of the activities given as follow is focused on the application of CFD/FEM modelling applied to concrete structures.

3.3.3.1 UU - CFD simulations

UU will assist DTU in FEM analysis of structural response of concrete elements in tunnels to thermal and pressure loads providing input from CFD simulations of both free and impinging jet fires in terms of pressure and temperature history (e.g. adiabatic surface temperature) on the boundaries of the elements. The envisaged CFD model is based on an implicit pressure-based solver. A RANS approach is employed for turbulence modelling and the Eddy Dissipation Concept by Magnussen and Hjertager (1977) for combustion. The Discrete Ordinates model is implemented to take into account radiation losses (Murthy and Mathur, 1998). The notional nozzle approach is used to model the under-expanded hydrogen jet in simulations (Molkov et al., 2009). The simulation will be conducted on the ANSYS Fluent platform. It is envisaged that the CFD model will be validated against a selection of tests performed within task 3.3.4 by HSE. A suggestion of tests to be performed and the associated details is given in Table 11. Parameters were calculated or established according to the following assumptions:

- A diameter of 3 mm is suggested for large scale tests, as this is one of the common values used for Thermally activated Pressure Relief Devices (TPRD). A smaller diameter of 1 mm is added to the matrix for analysing the effect of the diameter size on the structural integrity of the jets and safer conditions.
- The flame length for the free jet has been estimated through the dimensionless correlation for non-premixed hydrogen flames by Molkov and Saffers (2011).
- The distance nozzle-surface is equal to approximately 0.6Lf as experimental evidences showed that at this distance hydrogen jet flames reach the highest axial temperature, see Molkov (2012) and the maximum heat flux, see Breitung et al. (2009). Two cases with shorter distances, respectively 0.3 and 2 m for diameters 1 and 3 mm, may be included in the CFD analysis, as it is expected that the jet will create a larger combustion zone when impinging on a surface closer to the release point.

The experimental tests should be completed in M20. Thus, it is expected that CFD simulations will be concluded in M26.

Table 11. Suggested experimental tests to be simulated for CFD model validation.

Test	Pressure, bar	Diameter, mm	Mass flow rate, kg/s	Flame length, m	Distance to surface, m	Surface direction
1	700	1.0	0.027	3.32	2	Perpendicular
2	700	3.0	0.242	9.97	6	Perpendicular
3	700	3.0	0.242	9.97	2	Perpendicular

3.3.3.2 DTU - FEM modelling

A one-way-coupled thermo-mechanical model of a concrete tunnel section exposed to fire will be implemented. A drilled tunnel made of precast concrete ring segments could be used as case study for the purpose of the numerical investigation. If relevant, the tunnel used for experimental investigations in Task 4.4.1 could be taken as case study. In such cases, the main geometrical and material data on the tunnel should be available by month 19. Alternatively, a literature case study can be used as reference.

The thermal model will be used to obtain the thermal map of the concrete at subsequent times during the fire. The nodal temperatures will be taken as input by the mechanical model and the effect of such thermal solicitations will be investigated by means of a dynamic analysis, capable of accounting for the thermal degradation of the mechanical properties of the concrete. Possible effect of the pressure due to explosion of the car hydrogen tank could also be included. In this case, the mechanical model should take as input the pressure history on the tunnel walls obtained by CFD simulations in Task 4.3.

The FEM modelling envisages the steps described below. The time schedule of the activities is given in the title of the sections.

3.3.3.3 2D FEM model with nominal fire (M19-24)

The response of the tunnel will firstly be investigated under simplified thermal conditions, such as exposure to a nominal fire curve, in order to validate the thermal model and be able to start the implementation and validation of the mechanical model before more advanced CFD model of the thermal action is completed. The thermal model will provide a thermal map of the tunnel section under nominal fire exposure. The mechanical model will take the temperature input of the thermal model and simulate the response of a section of the tunnel to such fire. The following sub-steps are foreseen:

- Implementation of a 2D thermo-mechanical model of a cross-section of the tunnel;
- Definition of the thermal boundaries (internal cladding, soil/rock, etc.);
- Calibration of the thermal properties of concrete and insulating materials;
- Definition of the mechanical boundary conditions (effect of soil/rock and mechanical loads);
- Validation of the model for elastic and plastic behaviour;
- Validation of the model for thermal degradation of the mechanical properties at high temperatures;
- Investigation of the mechanical response of the tunnel section exposed to a nominal fire curve (the results of the thermal model provide input for the nodal temperatures of the mechanical model).

3.3.3.4 FEM with hydrogen jet fire (M25-30)

A more advanced investigation of the concrete elements response to hydrogen jet fires originated from the spurious opening of a TPRD will be carried out. The thermal model will take input from the results of the CFD simulation of hydrogen jet fire carried out by UU on the experiments performed within sub-task 3.3.4 in months 14-20 (see Table 23). It is therefore expected that the results of such CFD investigation will be readily available in month 25. The mechanical model will take the heat flux history or the temperature history of the thermal model and simulate the response of a section of the tunnel to such fire. The following sub-steps are foreseen:

- Investigation of the thermal response of the exposed segment of the tunnel. Depending on the results of the CFD investigations, a study on the effect of temperatures in the longitudinal direction of the tunnel could be envisage, by extending the model to a 3D model of a tunnel section;
- Investigation of the mechanical response of a 2D or 3D section of the tunnel exposed to a hydrogen-jet fire (the results of the thermal model provide input for the nodal temperatures of the mechanical model).

3.3.3.5 FEM with refined fire scenarios (M31-35)

This task is strongly interrelated with activities in task 4.3 and this description will be repeated in D 4.3. A refined mechanical model will be implemented in the remaining months of the project, which will consider further accident scenarios either referred to different car fires or the explosion of the car hydrogen tank will be considered. In this case, the pressure time-history on the concrete walls obtained by CFD investigation in task 4.3 should be used as input for the mechanical model. Therefore, the results of task 4.3 should be readily available by month 31. The following sub-steps could be considered:

- Investigation of the mechanical response of a 2D or 3D section of the tunnel exposed to the explosion pressure wave provided by task 4.3;
- Inclusion of the temperature effects of the fire after the explosion and comparison of the tunnel resistance with the case of fire without explosion;
- Investigation of the tunnel response to concomitant fire and explosion and comparison with the cases of fire after explosion and fire without explosion.

Overall it is expected that activities within sub-task 3.3.3 will follow the timeline reported in Table 12.

Table 12. Timeline of CFD/FEM simulations within sub-task 3.3.3.

Details of the CFD/FEM model development	Month due	Report at project meeting (PM)
(0) UU- DTU communication to define activities details and timeline	M8	3rd PM - Feb '20 (M12)
(1) 2D FEM model with nominal fire (DTU)	M24	5th PM - Feb '21 (M24)
(2) CFD simulations of thermal and pressure loads for hydrogen jet fires and passage of results to DTU for FEM modelling (UU)	M26	6th PM - Sep '21 (M31)
(3) FEM with hydrogen jet fire (DTU)	M30	6th PM - Sep '21 (M31)
(4) FEM with refined fire scenarios (DTU)	M35	7th PM - Feb '22 (M36)

3.3.4 Sub-task 3.3.4. CFD model on influence of hydrogen releases to fire spread scenarios in underground transportation systems (DTU)

Car park fire accidents appear to be severe events as several large fires occurred within the last decade worldwide. Fire scenarios in underground parking maybe even more hazardous because of the thermal feedback of the enclosures and the lower ventilation rates. The transition to more sustainable vehicles using more light-weight polymer materials, which are combustible by nature, and new fuelling systems, e.g. batteries and hydrogen, leads to different accident scenarios. Therefore, this sub-task will investigate the influence that hydrogen powered vehicles (HPV) may have on the fire spread in underground transportation systems with car parks as an example.

A CFD model will be developed to investigate the influence of hydrogen releases to fire spread scenarios in underground transportation systems (car parks). The model will be developed using Fire Dynamics Simulator and Pyrosim.

The model will be based on an actual underground car park as e.g. found under shopping malls. The relevant parameters to regard are the layout of the parking (type and geometry) as well as the ceiling height and structure. An important parameter for fire spread from car to car is the spacing between cars.

The scenarios will assume a mixture of traditional vehicles and hydrogen powered vehicles. The hydrogen storages will be emptied through the TPRD when this device is activated at the set temperature of 110 ºC.

Two base scenarios A and B will be worked out that have different designs of the underground car parks. The model will include up to 10 cars with and without hydrogen storage. The parking distance will be varied. The following matrix provides the combinations of simulations. In total 15 scenarios will be simulated. Table 14 shows the time schedule of simulations.

Table 13. Matrix of the simulations planned within sub-task 3.3.4.

No of simulations	Carpark type A & B	Spacing	Ventilation
Ignition hydrogen car	2	3	2
Ignition gasoline car	1	1	1
No of hydrogen cars	3	1	1

Table 14. Timeline of CFD simulations within sub-task 3.3.4.

Details of the CFD model development	Month due	Report at project meeting (PM)
d) Model description of car park types A and B	M12	3rd PM - Feb '20 (M12)
e) Simulation of fire spread involving hydrogen cars (vs.1)	M24	5th PM - Feb '21 (M24)
f) Simulation of fire spread with various spacing and ventilation conditions. Validation using test results frøm 3.4.2 (vs.2)	M30	6th PM - Sep '21 (M31)

3.4 Experiments

3.4.1 Sub-task 3.4.1. Pressure peaking phenomenon for hydrogen jet fires in confined spaces (USN)

3.4.1.1 Introduction and motivation

The rapid hydrogen discharge from a storage tank in confined spaces may lead to a high overpressure capable to cause property damages. The phenomenon occurs while introducing a gas with lower density than the gas already inside the enclosure and is denominated pressure peaking phenomenon (PPP). The phenomenon is distinct for hydrogen and occurs when the released hydrogen mass flow rate is relatively high and the vent area is relatively small (Makarov et al., 2018). The PPP is characterized as a transient overpressure growing to a characteristic peak in vented enclosures, and then decrease to a steady state pressure. Previous work of numerical validation (Hussein et al., 2018) showed and confirmed that the two major parameters to determine the overpressure in an enclosure are the vent size and hydrogen mass flow rate into enclosure. Brennan and Molkov (Brennan and Molkov, 2018) have presented a work where they have investigated ‘inherently safer’ PRD (Pressure Relief Device) parameters with correlation of natural ventilation variables in enclosure for a tank blowdown scenario. Their work provides the description of the model used to assess the experimental parameters described in this report. The study showed that with decreasing the PRD diameter, the overpressure will drop accordingly. Their study presented a correlation between hydrogen concentration and the vent area.

The pressure peaking phenomenon for hydrogen ignited releases will pose an additional effect as the density of the burned gases is lighter than hydrogen. This is clearly demonstrated by Hussein et al. (2018) and Makarov et al. (2018). Compared to the PPP for unignited releases, the PPP for ignited releases will cause a larger overpressure for the same hydrogen mass flow rate and enclosure vent size, posing a larger hazard to the confined structure.

3.4.1.2 Specific objectives and expected outcomes

This sub-task will investigate the PPP in large scale experiments. This will result in a set of validation data for numerical simulations and engineering models, but also aim to provide experimental results that will directly give guideline recommendations. The aim is to assess the entity of the overpressure and thermal hazards posed by PPP for ignited hydrogen releases in enclosures with limited ventilation and provide recommendations to prevent the damage to the structure.

3.4.1.3 Knowledge gaps and accident scenarios assessed

The knowledge gap that will be addressed in this subtask is the pressure peaking phenomenon validation for garage-like enclosures for ignited hydrogen releases.

3.4.1.4 Synergy with HyTunnel-CS work plan

This section will give an overview of how the different activities in WP3 will combine to meet the objectives of WP3 and work in synergy with other actions in the Hytunnel-CS project. Sub-task 3.4.1 is closely connected to sub-task 3.2.1 on the engineering models for Pressure Peaking Phenomenon for ignited hydrogen releases and sub-task 3.3.1 on the associated CFD model. The experimental campaign will provide the set of data necessary for extending the validation range of the models to large scale scenarios. The experimental work in the present task is also connected to the WP2 sub-task 2.4.2 on PPP for unignited hydrogen releases in large scale and the associated engineering model developed by UU within task 2.2. Thus, the experimental planning and execution is closely connected to the modelling work by UU in tasks 3.2.1, 3.3.1 and 2.2. UU has been collaborating with USN to refine the experimental set-up and test specifics, and will use sub-task 3.4.1 outcomes to extend the validation range of their models.

3.4.1.5 Details of the experimental campaign

This section gives a detailed description of the experiments as they are planned. It will as well delineate the method employed to produce the experimental data.

3.4.1.5.1 Conceptual design

The experimental work planned in this task will be conducted at a test site outside USN. The rationale behind this decision was based on the time and infrastructure available. At the external site, a steel reinforced container of 14.9 m^3 is available. This is considered to be an optimal facility for the tests on PPP for ignited hydrogen releases.

The steel container is shown in Figure 1. It has several 18 mm threaded holes (M18) for instrumentation and a small door for access. A significant effort was done to seal the joints between the side walls and the end walls. There are also five 80 mm pipes through the walls or floor. Two flanges are used as ports for hydrogen and air (for flushing after experiment). The rest of the flanges are closed or open as vents.

Figure 1. Steel container for Pressure Peaking Phenomenon experiments.

A P&ID is shown in Figure 2. The whole experimental setup is controlled by a central timing unit (pulse generator), and all sensor data are stored by either two oscilloscopes (Sigma and Gen3i). The P&ID shows the pneumatically operated valves for H_2 and air (for flushing after experiment) and their control signal for the pulse generator. There is a propane pilot flame with a separate propane valve and electrical spark (10kV) igniter.

The experiments will be divided in two series. A first group of tests will be conducted on hydrogen releases at a constant mass flow rate. The second series will investigate the PPP produced by a transient blowdown release. The H_2 reservoir will use a 12 bottle stack at 200 bar for constant mass flow validation experiments and a 36 l pressure vessel at 700 bar H_2 for the blowdown experiments.

The vent opening area and the mass flow will be the variables in this experimental campaign. The hydrogen release nozzle will to a certain degree determine the mass flow of hydrogen into the enclosure.

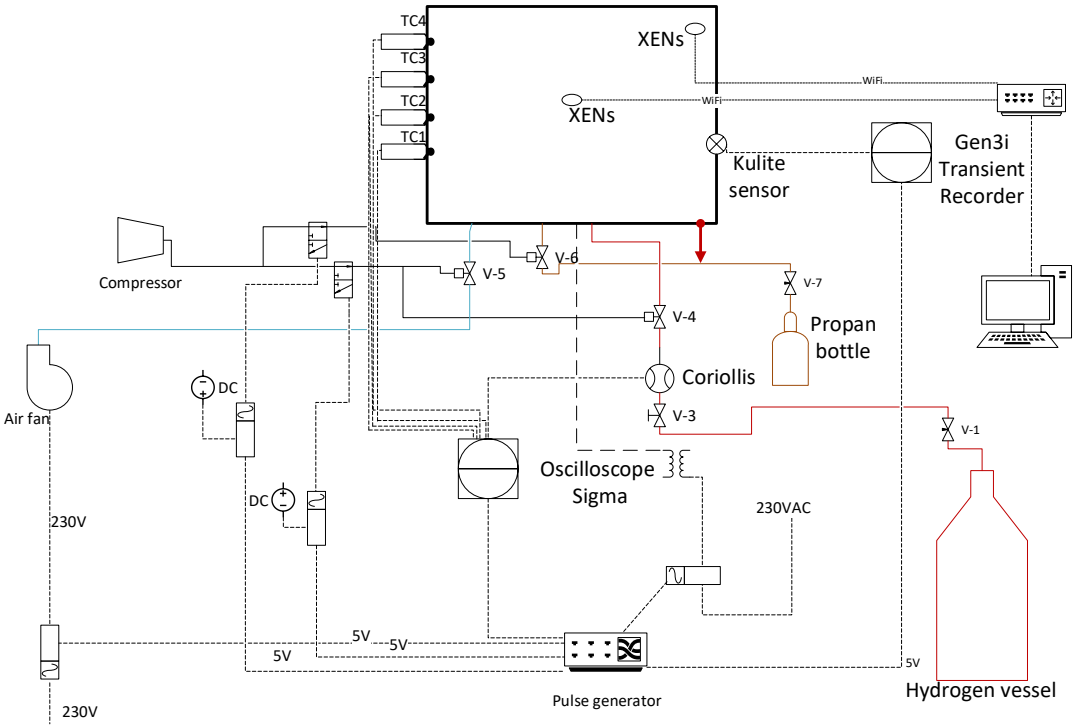

Figure 2. P&ID for the ignited hydrogen releases PPP experiments.

3.4.1.5.2 Instrumentation

The main instrumentation in this experimental setup is associated to the pressure measurement. A pressure transducer of type "Kulite pressure transducer XTM - 190-50A" or similar will be used in the experiments. One or two sensors will be used. The pressure peaking phenomenon is a transient phenomenon with a characteristic time in the order of seconds. Based on this there is less interest to capture acoustic waves in the enclosure. The logging frequency will still be in the order of 1 to 10kHz.

Coriolis type mass flow meters will be used to measure the mass flow of hydrogen into the enclosure. K-type thermocouples will be used to measure the temperature inside the enclosure. Voltage amplifiers will be used to convert the mV signal to a 1-5 V signal, but at the moment the bandwidth and uncertainty of this equipment is unknown. XEN-5320 wireless sensors will be used to measure the hydrogen concentration and temperature inside the enclosure. The XEN-5320 has a complex accuracy depending on humidity and temperature, but it has a sensor noise of 500 ppm. The XEN sensors have a maximum upper temperature limit. Thus, it will not be used if the expected temperature exceeds this limit.

Table 15. Uncertainty of measurements.

Equipment	Uncertainty	Absolute uncertainty
Pressure sensor	±1% FSO BFSL (Full Scale Output - Best Fit Straight Line)	±3.5kPa
Mass flow sensor	±0.5% of flow rate	-
Concentration sensor	1-3 % FS	1-3%
K-type thermocouple		± 2.2 ºC

3.4.1.5.3 Infrastructure

The main infrastructure is the test site and the hydrogen tanks and pumps. The experimental progress is dependent on this infrastructure. Its availability has to be coordinated with the owner of the test site. The delivery of the hydrogen tanks and pumps is in progress to be fully defined, as the tank has been ordered from Hexagon whereas a tender from Proserv company is still standing (national Haskel supplier).

3.4.1.5.4 Key resources

No key resources were identified. Dedicated man-hours to this project are provided by USN.

3.4.1.5.5 Anticipated range and number of tests to be undertaken

The experimental plan for this sub-task is given below. The first experimental campaign will follow the plan in Table 16, and the 700 bar campaign will follow in a second stage (campaign 2, Table 17). Campaign 1 will focus on hydrogen releases at a constant mass flow rate. As shown in Table 16, the mass flow rates are given. Similar mass flow rates are investigated to assess the. The duration of the release defined in the table. The maximum temperature inside the enclosure limits the total duration. At the time when this report is written, these experiments are already completed.

Table 16. PPP for ignited hydrogen releases: campaign 1.

Exp nr	Mass flow [g/s]	Duration [s]	Vent area (m^2)
1	1.45	5	0.005457
2	1.37	10	0.005457
3	3.38	5	0.005457
4	3.15	10	0.005457
5	3.14	10	0.010484
6	3.04	10	0.010484
7	7.9	6	0.010484
8	7.5	6	0.010484
9	8.37	6	0.015511
10	8.35	6	0.015511
11	8.63	7.5	0.015511
12	8.9	6	0.015511
13	11.72	6	0.015511
14	11.37	6	0.015511
15	4	6	0.015511
16	4.07	6	0.015511
17	11.52	6	0.010484
18	11.47	6	0.010484
19	8.62	6	0.005457
20	8.5	7.5	0.005457
21	8.52	6	0.010484
22	2.6	6	0.010484
23	2.36	15	0.010484
24	2.38	25	0.015511
25	3.87	25	0.015511
26	6.7	20	0.015511

27	6.65	10	0.015511
28	6.56	10	0.010484
29	6.55	20	0.010484
30	6.65	10	0.005457
31	6.56	20	0.005457

The following PPP campaign will focus on release of hydrogen during blowdown of a 700 bar and 36 l storage tank. The mass flow rate will change and will be measured during the blowdown. The variables in this case are given by the nozzle diameter and vent area. It is envisaged that tests will be conducted with a nozzle diameter of 2 mm, which is the typical value for hydrogen powered vehicle TPRD. Nozzles with lower diameter, i.e. 0.3 and 0.5 mm will be tested to find the release conditions producing an overpressure lower than the threshold for damage to a garage structure (10 kPa, Baker et al., 1983). The exact details of the vent area will be determined at a later stage.

Table 17. PPP for ignited hydrogen releases: campaign 2.

Experiment nr	Vent area (m^2)	Pressure (bar)	Nozzle diameter (mm)	Mass flow (g/s)
9	A1	700 bar blowdown	2	Measured
10	A1	700 bar blowdown	0.5	Measured
11	A1	700 bar blowdown	0.3	Measured
12	A2	700 bar blowdown	2	Measured
13	A2	700 bar blowdown	0.5	Measured
14	A2	700 bar blowdown	0.3	Measured

3.4.1.5.6 Constraints (noise, pressure, site availability)

The main constraint of this experimental sub-task is the availability of hydrogen and the 700 bar system of tank and pump. The mass flow measurement may be as well a constraint as the available Coriolis mass flow meter does not handle the maximum mass flow expected from the blowdown of a 700 bar tank with a 2 mm nozzle. However, the pressure drop in the release and mass flow rate system may be expected, which can result in an effective lower mass flow. The 700 bar blowdown tests will also have a limitation on the release time. This limitation is based on the total oxygen content in the enclosure. The temperature inside the enclosure will be assessed and monitored to ensure that it does not exceed the maximum allowed by the structure resistance.

The activities within sub-task 3.4.1 will follow the timeline indicated in Table 18.

Table 18. Delivery timeline for sub-task 3.4.1.

Experimental campaigns timeline	Month due	Report at project meeting (PM)
Campaign 1. Releases in 15 m^3 volume with lower source pressure (can be reported in intermediate report).	M16	3rd PM - Feb '20 (M12)
Campaign 2. Releases in 15 m^3 volume with 700 bar pressure source	M30	6th PM - Sep '21 (M31)

3.4.2 Sub-task 3.4.2. Thermal effects of hydrogen non-premixed turbulent combustion on a vehicle fire behaviour, structure and evacuation conditions in underground parking (USN)

3.4.2.1 Introduction and motivation

The release of hydrogen from a TPRD and the resulting jet fire may be a hazard to people, other vehicles and structures. The influence of forced ventilation in underground parking and garages is also an important factor in assessing the hydrogen jet fire hazards.

3.4.2.2 Specific objectives and expected outcomes

This experimental subtask will provide data on temperatures and heat fluxes as a primary delivery. This data will be used as validation data for engineering tools and numerical simulations. Once the models are validated they can be applied to further scenarios to give generalized recommendation.

3.4.2.3 Knowledge gaps and accident scenarios assessed

A list of the knowledge gaps identified and addressed in this sub-task is given below:

- Effect of water vapour generated by hydrogen combustion from TPRD on the visibility and the choice of "cross passage" distance;
- Hydrogen non-premixed turbulent combustion in scaled underground parking;
- Thermal effects of hydrogen non-premixed turbulent combustion on a vehicle fire behaviour, structure and evacuation conditions in underground parking;
- Dynamics of total and radiative heat flux on under-vehicle hydrogen storage and surroundings from the “conventional” car fire before and after TPRD initiation;
- Ventilation effect on H2 fire inside confined space.

It is considered that the experimental set-up at the current status may not provide all the data necessary to close the knowledge gaps on the fire dynamics of hydrogen vehicles and the effect of water generation during hydrogen combustion from TPRD on soot density from car fire. Therefore, further efforts and collaborations with other partners conducting experiments will be carried out to ensure that these objectives are fulfilled.

3.4.2.4 Synergy with HyTunnel-CS work plan

Sub-task 3.4.1 is connected to task 3.3, given that it will provide the experimental results required to validate numerical simulations. Modellers conducting activities in sub-task 3.2.3 and 3.3.2 will also give inputs on the sensor locations as well as the expected mass flow rates and experimental scaling. The experimental infrastructure is the same as the one used in sub-task 2.4.1. Furthermore, experiments in this sub-task intend to analyse the effect of hydrogen jet fires on a vehicle fire dynamics in an underground parking (applying the appropriate scaling) or in a garage like scenario. Experiments conducted by CEA within sub-task 3.4.5 will extend the analysis to car fires in a tunnel.

3.4.2.5 Details of the experimental campaign

3.4.2.5.1 Conceptual design

The key concept of this study is to use a 40” shipping container (or similar dimensions) as the confined space. It might be an option to use a reinforced concrete container of the same dimensions. A mechanical ventilation system will be installed at the closed end, whereas the other end will be open. Figure 3 and Figure 4 give a sketch of the experimental setup. It is shown a sketch of two mock cars, which will be scaled and installed to simulate vehicles inside the confined space. The TPRD will be mounted on one of the mock cars.

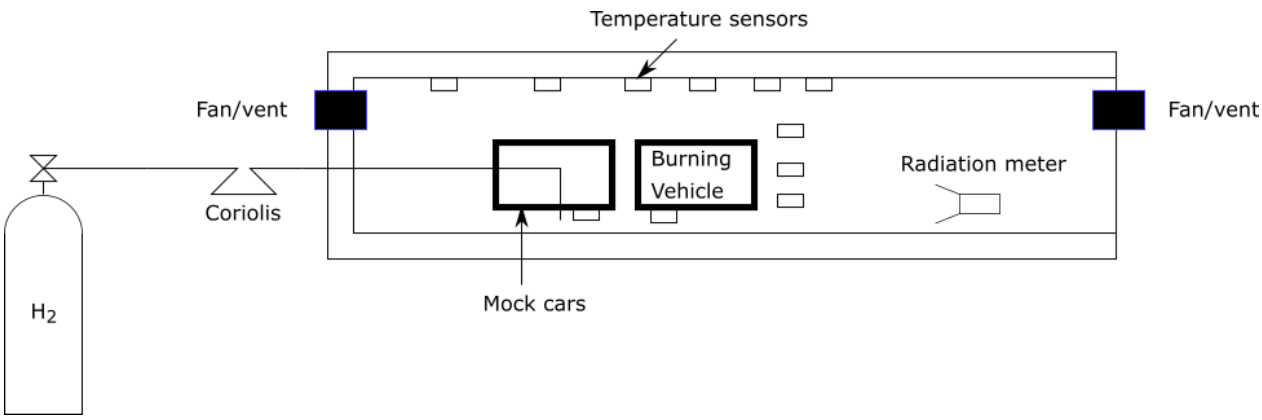

Figure 3. Sketch of the experimental setup.

The release of hydrogen inside the confined volume will be directed downwards and it will be located below a structure simulating a scaled version of a car with a TPRD release under it.

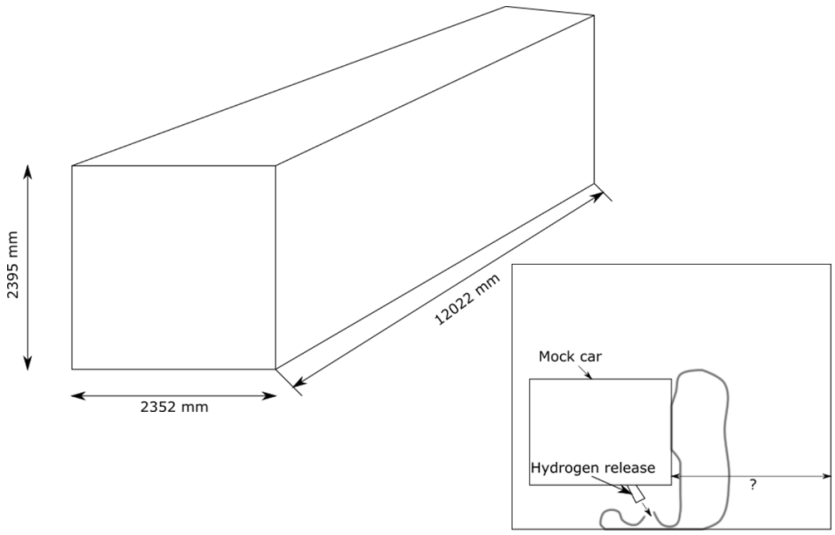

Figure 4. Sketch of release direction and geometry dimensions.

The “Effect of water vapor generated by hydrogen combustion from TPRD on the visibility and the choice of "cross passage" distance” knowledge gap will be investigated using pure qualitatively methods. Visual markers or LEDs will be installed along the length of the container. A camera will be installed at the open end of the container. This will give qualitative evaluation on the visibility in the container.

The “Thermal effects of hydrogen non-premixed turbulent combustion on a vehicle fire behaviour, structure and evacuation conditions in underground parking” knowledge gap will be assessed during the experiments. The main approach to this knowledge gap is to provide experimental measurements to validate numerical simulations. The effect of the experimental setup geometry will not be assessed given that there will not be possibility to change it.

The “Dynamics of total and radiative heat flux on under-vehicle hydrogen storage and surroundings from the “conventional” car fire before and after TPRD initiation” knowledge gaps is intended as follows: if a conventional car burns, there is a need to assess the thermal effect on the H_2 tank of the vehicle located nearby. This will be investigated by setting up two mock cars close to each other, one representing a hydrogen powered vehicle and the other representing a conventional fuelled car. In this scenario, the conventional car will be on fire and it will be simulated by a hydrocarbon gas fire. This arrangement was selected as it allows to measure the mass flow in the fire. It will however not fully represent a real car fire, as it is expected that the soot formation will probably be lower. Temperature

sensors and heat flux sensors under the mock hydrogen car will investigate the thermal effect on the hydrogen car TPRD. The effect of ventilation rate will also be investigated in these tests.

The "Ventilation effect on H2 fire inside confined space" knowledge gap will be investigated in all experiments. The forced ventilation will be set accordingly to standard requirements $\dot{V}_r$ but also with $\dot{V} = \frac{\dot{V}_r}{2}$ and $\dot{V} = 0$.

3.4.2.5.2 Instrumentation

Temperature sensors will be installed in the container, as well as heat flux measurements. The measurements of the difference between total and radiative heat flux in the experiments is still under consideration and definition.

Light diodes or visual markers will be installed to assess qualitatively the visibility effect of water mist in such a configuration.

Mass flow will be measured by Coriolis type mass flow meter.

3.4.2.5.3 Infrastructure

The 40" container and the Norward test site in Bamble Norway are the main infrastructures in this experimental investigation. There could be an option to use a concrete container with equal dimensions instead of the steel container.

3.4.2.5.4 Key resources

The required resources are allocated by USN.

3.4.2.5.5 Anticipated range and number of tests to be undertaken

The current experimental plan includes 15 tests and they are showed in Table 19.

Table 19. Experimental matrix for sub-task 3.4.2.

Test nr	release direction (up (u) or down (d))	Hydrogen mass flow (g/s)	Ventilation rates (m/s)	Propane fire	Comments
1	d	m1	v1	No	high mass flow
2	d	m2	v1	No	medium mass flow
3	d	m3	v1	No	low mass flow
4	d	m1	v2	No	high mass flow
5	d	m2	v2	No	medium mass flow
6	d	m3	v2	No	low mass flow
7	d	m1	v3	No	high mass flow
8	d	m2	v3	No	medium mass flow
9	d	m3	v3	No	low mass flow
10	d		v1	Yes	Scaled car fire HHR
11	d		v2	Yes	Scaled car fire HHR
12	d		v3	Yes	Scaled car fire HHR
13	d	blow down	v1	No	If possible
14	d	blow down	v2	No	If possible
15	d	blow down	v3	No	If possible

3.4.2.5.6 Constraints (noise, pressure, site availability)

The main constraint is the maximum heat load on the structure, as well as the maximum temperature. The mass flow or heat release rate have to be set accordingly to the constraints. The test will be conducted at the Norward training center in Bamble Norway, and the site requirements must be followed as well as the approval of the safety officer at the site.

The experimental campaign will follow the timeline given in Table 20.

Table 20. Delivery timeline for the experimental campaign sub-task 3.4.2

Experimental campaigns timeline	Month due	Report at project meeting (PM)
(1) Detailed experimental series finalized before M21	M21	5th PM - Feb '21 (M24)
(2) Experimental results obtained before summer 2021	M30	6th PM - Sep '21 (M31)

3.4.3 Sub-task 3.4.3. Effect of hydrogen jet fire on structure integrity and concrete spalling (DTU)

In this sub-task DTU will perform experiments to investigate the effect of hydrogen (jet) fire on the structural integrity and concrete spalling in a tunnel. The aim of experiments is to establish a scientific basis and generate experimental data to support hazard and risk assessment. It will support task 3.3.3 and will be applied as basis for the coupled CFD/FEM modelling and the reaction to fire structures. The experiments will measure the effects of free and impinging hydrogen jet fires in small scale on different types of concrete used in tunnels that could lead to explosive spalling. Large scale experiments are planned for in sub-task 3.4.4. by HSE. The laboratory scale experiments are seen as a screening procedure to select the materials for the large-scale tests.

A spalling test rig will be applied that allows testing of concrete cylinders exposed to compression loads typical for tunnel designs. Pressure is one of the key parameters that may lead to explosive spalling behaviour.

The concrete spalling test rig (Figure 5) allows for fast and inexpensive testing of concrete in terms of explosive spalling under various compressive loads e.g. typical for tunnel designs. It enables to perform tests close to real condition as e.g. found in Danish sub-sea tunnels. Concrete cylinders with a diameter of 150 mm and a height of 300 mm are placed in a steel mantel consisting of two 50 mm thick parts, connected by 12 bolts 36 mm in diameter. A pressure-distributing layer of neoprene is placed between the concrete cylinder and the steel mantle to compensate for irregularities of the concrete surface. The steel mantle is constructed in such a way that it can resist the pressure from thermal expansion that could develop at the surface of a concrete wall in a fire situation. The pressure from the thermal expansion is a key parameter found to cause explosive spalling. One end of the cylinder is suddenly exposed through a 100 mm diameter hole to heat radiation from an oven at 1000°C, or any jet flame, e.g. hydrogen jet flame.

Figure 5. Test mantel for compression (left), conditioning in climate chamber (centre), sample after test (right).

Rectangular concrete objects or other relevant materials may be tested using the H-TRIS setup (Figure 6) that allows for flexible measurements and the installation of a variety of analytical methods including stress measurements, temperature profiles in the objects and boundary conditions.

Figure 6. H-TRIS radiation panel for concrete spalling testing.

Part of these experiments are planned to use a laboratory scale hydrogen jet flame. These experiments will be coordinated with task 3.4.4. HSE. A possible in-kind contribution to provide some medium scale hydrogen jet flame experiments is being discussed with USN.

3.4.3.1 Concrete types – proposals

The following types of concrete are planned to be tested (Herholdt, Justesen, 2010). Tests will start from a reference concrete that is expected to show explosive spalling. The concretes moisture contents will be conditioned to 0 or 4 % (should be verified). All concretes will be hardened for minimum 28 days (Sørensen, 2014). Detailed properties of the concrete types are given in Table 21.

List of suggested materials to test:
#1: Reference concrete. Should show NO SIGN on spalling;
#2: Moderate dense concrete. Probably not susceptible to spalling, at least when PP-fibers are added;
#3: Dense concrete. Could be susceptible to spalling, but the amount of fillers is on a relatively low level, so adding of fibers will probably remove the risk;
#4: Dense and high-strength concrete. Experience has shown susceptible to spalling, but reducing of the filler content, moisture level, and adding of PP-fibers can probably remove the risk. The timeline of the experimental tests is given in Table 22.

Table 21. Characteristics of the concrete types proposed for testing in sub-task 3.4.3.

Concrete	Characteristics	W/C	MC	FA	PL	PP	AG
#1	Ref.	0.45	0	0	0	0	Sea
#2	Dense	0.40	1%	0	0	0/2%	Sea
#3	Dense +	0.35	2%	2%	+	0/3%	Sea
#4	Dense + High strength	0.30	4%	0	+	0/4%	Sea

The abbreviations used in Table 21:

- W/C Water/cement ratio
- MC Microsilica
- FA Fly ash
- PL Plastizicer

- PP Polypropylene
- AG Aggregates
- % w/w

Table 22. Schedule of the experimental campaign within sub-task 3.4.3.

Experimental campaign timeline	Month due	Report at project meeting (PM)
(1) Casting of concrete cylinders and hardening (M9-M11)	M11	3rd PM - Feb '20 (M12)
(2) Screening test using the test rig (M11-M13)	M13	4th PM - Sep '20 (M19)
(3) Casting of concrete plates and hardening (M12-M13)	M13	4th PM - Sep '20 (M19)
(4) Laboratory scale testing H-TRIS/Hydrogen jet flames (M14-M16)	M16	4th PM - Sep '20 (M19)
(5) Eventual in-kind jet flame tests at USN	M14	4th PM - Sep '20 (M19)

3.4.4 Sub-task 3.4.4. Effect of hydrogen jet fires on the erosion of tunnel road materials and lining materials (HSE)

The aim of the experimental campaign is to establish the effect of hydrogen jet fires, including the mass loss and degradation, from the impact pressure and ultra-high temperatures, on selected structural materials commonly used in tunnel and bridge construction in the United Kingdom and Europe. Hydrogen will be discharged under pressure equivalent to that used / to be used in the storage tanks of vehicles through nozzle diameter(s) that are equivalent to commercial use for pressurised tanks fitted to vehicles.

3.4.4.1 Experimental facility

The Health & Safety Executive's Science and Research Centre in Buxton will be used to create a facility to test selected structural materials subjected to hydrogen jet fires. The facility is capable of storing 100 litres of hydrogen at pressures up to 1000 bar. Images of the existing facility are shown in Figure 7.

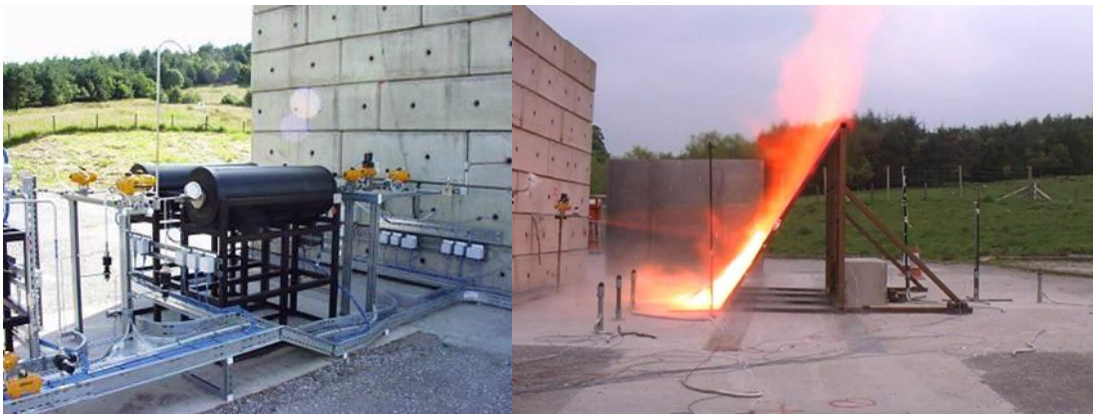

Figure 7. High-pressure hydrogen test facility at HSE Science and Research Centre, Buxton.

3.4.4.2 Test Matrix

The structural test samples will be selected from the more commonly used structural materials to construct tunnels, ranging from 19th century rail tunnels to modern road and rail tunnels in the United Kingdom and in Europe.

Proposed structural materials are:

1. Reinforced concrete
2. Pre-stressed concrete with un-bonded tendons
3. Pre-stressed concrete with bonded tendons

4. Sprayed concrete (shotcrete)
5. 19th century specification brickwork.

A more detailed description of the structural materials is given in sections 3.4.4.2.1-5. Other structural materials that have been considered are cast and wrought iron, steel and timber, but these are considered not sufficiently commonly used tunnel linings and therefore not incorporated within the scope of this programme. The precise nature and dimensions of the samples that will be tested may be amended in consultation with the project partners and will consider the results from testing carried out by DTU and described in section 3.4.3.

Sample panels 1 m x 1 m square and nominally 150 mm to 200 mm thick constructed from, or faced with, each of the above selected structural materials will be supported on a steel frame test rig, and the hydrogen jet fire will impinge upward on the centre of those sample panels as shown on Figure 8.

Sensitive components, i.e. sensors and cabling, will be protected from damage from the hydrogen jet fire by fire-cladding.

The nozzle size or sizes to project the hydrogen will be determined from the range of pressure relief valves used, or to be used, in the storage tanks for hydrogen powered vehicles. It is envisaged that a diameter of 2 mm may be used as this is a design typically found in currently commercialised hydrogen powered vehicles.

The stand-off distance from the hydrogen (pressure release) nozzle to the impact surface of the structural materials can be varied by lowering or raising the apparatus of the hydrogen nozzle.

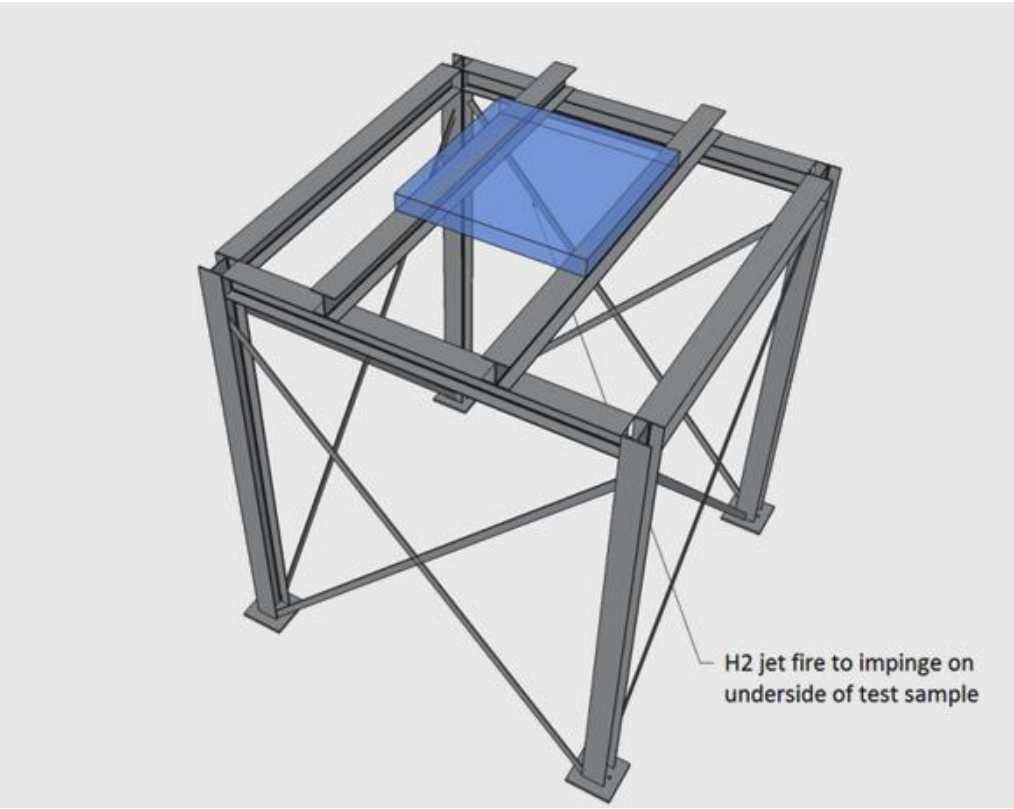

Figure 8. Potential test rig for mounting the selected structural material panels above a hydrogen jet fire.

3.4.4.2.1 Reinforced concrete

Concrete is known to be subject to explosive spalling where the design strength is greater than 60 MPa or greater than 3% moisture content. Three samples of concrete (1 m x 1 m on plan area and 200 mm thick) will be tested initially, with one less than 3% moisture content, one greater than 3% moisture content, and one with a strength greater than 60 MPa but with less than 3% moisture content. The concrete samples will be reinforced with structural steel mesh fabric.

3.4.4.2.2 Pre-stressed concrete with un-bonded tendons

A concrete prism (1m x 1m on plan area and 200 mm thick) will have horizontal ducts cast into it and steel threaded bars will be inserted and stressed to a level compatible with that of post-tensioned pre-stressing used in pre-fabricated tunnel segments and cut-and-cover / sub-bottom sunken tunnels. With this technique, the range of magnitude of pre-stressing could be explored to ascertain the variation in erosive damage and mass loss.

3.4.4.2.3 Pre-stressed concrete with bonded tendons

A concrete prism (1 m x 1 m on plan area and 150 mm or 200 mm thick) will have been precast on a pre-stressing bed by a prefabricator partner, such as that used for pre-stressed concrete planks in the building industry or in segmental tunnel linings or sunken box construction.

3.4.4.2.4 Sprayed concrete (shotcrete)

Tunnels through hard rock often have a sprayed concrete (shotcrete) lining. Sprayed concrete will be applied to a 1 m x 1 m on plan area and 150 mm thick reinforced concrete substrata; the sprayed concrete will have steel mesh fabric reinforcement embedded at an industry-standard depth.

3.4.4.2.5 19th Century specification brickwork

Tunnels were constructed in the 19th century in the United Kingdom for the rail network. These were almost wholly lined with brickwork, predominantly using lime mortar. A sample panel (or panels) of salvaged bricks from a typical tunnel will be constructed by bonding these bricks with epoxy resin to a minimum thickness of 75 mm reinforced concrete substrate, with lime (hydraulic) mortar incorporated between the bricks to represent the typical lining of a 19th century tunnel.

3.4.4.3 Measurements

Firstly, the pressure and temperature characteristics of an ignited hydrogen jet is to be measured by thermocouples and pressure sensors by traversing a steel plate with a pressure sensor across the jet fire at a range of standoff distances for selected nozzle diameters. This will establish the parameters of temperature within, and the pressures generated on, a surface by a hydrogen jet fire.

Secondly, measurements of the mass loss, depth and radial extent of material loss will be made from a hydrogen jet fire impinging on the selected structural materials. Embedded pressure sensors and thermocouples will be installed in the structural samples to measure the temperature and pressure gradients and their distribution within the structural materials of a hydrogen jet fire impinging on the surface. Total mass loss will be established by weighing the sample before and after testing. Three-dimensional laser scanning and photography will be used to establish the nature, depth and extent of the erosive impact of hydrogen jet fire on the structural materials.

3.4.4.4 Further Test

A further single test will be carried out on a representative sample of road material commonly found in tunnels (the material specification as yet to be decided). This test will be filmed to provide a visual record of the effect of the impingement of a high pressure hydrogen flame on that surface. No other measurements will be made.

3.4.4.5 Results

The question of what the effect of a hydrogen jet fire on selected structural materials, commonly used for tunnel construction, is to be answered. The degradation, material loss and other effects on these structural materials will be established.

The timeline for the programme is detailed in Table 23.

Table 23. Timeline of pre-test and experimental delivery activities.

Experimental campaigns timeline	Month due	Report at project meeting (PM)
(1) Confirm five materials to be tested in discussions with SAB members and partners	M10	3rd PM - Feb '20 (M12)
(2) Commence experimental programme	M14	4th PM - Sep '20 (M19)
(3) Intermediate results	M18	4th PM - Sep '20 (M19)
(4) Final results and conclusions for recommendations	M20	5th PM - Feb '21 (M24)

3.4.5 Sub-task 3.4.5. Effect of hydrogen combustion from TPRD on vehicles fire dynamics in tunnel (CEA)

The TPRD on the storage tank of a hydrogen powered vehicle should activate when the car is involved in a continuous and established fire. The vented hydrogen is likely to ignite producing a jet fire. Overall, it is not known the effect of the hydrogen jet fire on the fire dynamics of the vehicle, as well as the resulting heat release rate (HRR) and produced smoke. Hydrogen combustion is characterised by high HRR. On the other hand, duration if a hydrogen release is lower than the characteristic duration of car fires. However, the water vapour produced during hydrogen combustion may function as an extinguish agent and oxygen consumer, potentially reducing the HRR of the vehicle. Furthermore, the water vapour may positively affect the smoke produced by the vehicle fire by increasing its buoyancy and stratification, as well as annihilating the smoke particles and affecting the smoke layering. All the mentioned factor may have a significant effect on the evacuation and rescue procedures.

The present task is focused on an experimental campaign aimed at closing the mentioned knowledge gaps by investigating the effect of hydrogen combustion on the fire dynamics and total HRR of a car fire in a real scale tunnel. These tests will be complementary to the experiments conducted by USN within sub-task 3.4.2 on a underground parking and garage like scenario.

The matrix of experiments given in Table 24 presents a list of six relevant tests (ID N° 1, 2, 3, 4, 5, 6). The vehicle fire will be represented by a fire source with similar load. The inclusion of a mock car will be evaluated in due course. The matrix gives an overview of the main test parameters and it highlights the gas used, whether the TPRD release is included and the forced ventilation is present. A more detailed description for each test is given in the text that follows. It includes the aim of each test, the operating conditions and the measurement equipment that will be employed.

A preliminary characterization and validation of the instruments, measurements and tunnel parameters is made in test N°0 to ensure good results exploitation.

Table 24. Matrix tests of fire jet TPRD in tunnel

Test N°	Description	Gas	TPRD	Vehicle	Ventilation	Goal / Comments	Priority
0	Devices qualification tests					Reproduce one of the pre-tests for validation	
1	Jet fire – Reference test: ignited H_2 jet on fire (burner type) with downwardly oriented TPRD	H_2	Y	N	Y	Accident/ Reference scenario. Storage tank has pressure 700 bar as nominal value. The scenario includes ventilation and smoke (TPRD to be selected)	1
2	Unignited gas dispersion in a tunnel	He	Y	N	N	No fire, concentration measurements along the tunnel. Aim: prepare the ignition of test 8-WP4, provide data for CFD benchmarking	1
3	Characterization of a single fire as test 1	-	N	N	Y	Fire burner alone with smoke in a ventilated tunnel. Thermal flux measurements and smoke dispersion. Aim: assess H_2 impact on fire (tests 1, 3)	1
4	Jet fire / Test 1 without ventilation	H_2	Y	N	N	H_2 jet test on fire with smoke, non-ventilated tunnel, downwardly oriented TPRD. Aim: assess impact of ventilation (tests 1, 4)	1
5	Jet fire / Effect of TPRD orientation	H_2	Y	N	Y	H_2 jet test on fire with smoke, ventilated tunnel, upwardly oriented TPRD. Aim: assess the TPRD orientation impact (tests 1, 5)	1
6	Jet fire / Reproducibility of test 1	H_2	Y	N	Y	Repeatability of the reference test. Second reference test (same as test 1)	1

CEA will adopt a progressive approach to limit the impact on the test facilities, i.e. the tunnel, instrumentation, etc. Calculations and pre-tests will be conducted in advance to consider the safety and the integrity of the facilities.

3.4.5.1 Test N°0 – Device qualification tests

The main goal is to firstly characterize the devices in the real tunnel environment (i.e. specific conditions such temperature, humidity, dust, etc.) to validate the protocol and the measurements. This test has two additional objectives: to compare results to laboratory pre-tests to assess the repeatability of the experiments in the tunnel and to characterise the ventilation.

During this test the entire set of experimental devices will be installed. A list of the equipment is given as follows:

- Gas concentration sensors (Oxygen, He, H_2, combustion products),
- Pressures sensors,
- Thermal fluxes devices,
- Temperatures sensors,
- Flowmeters,
- Camera, optical sensors.

The system of data monitoring and analysis operates in same conditions as previous tests conducted in the laboratory scale.

3.4.5.2 Test N°1– Ignited jet and fire load (Reference test)

This test has for objective the reproduction of a representative scenario of a fire in a tunnel (based on the probability – frequency of the accidents, capacity of the fire, congestion in the tunnel, etc.) defined in the other WPs and report by Sandia National Laboratories available in LaFleur et al. (2017).

During this test, the operating condition in the tunnel will be normal, the ventilation is present and no obstacle is present around the venting pipe.

This test consists of realizing an ignited hydrogen fire jet from a TPRD downwardly oriented in a free field along the tunnel axis. The effect of the jet fire is measured on one fire like a propane burner (or equivalent fuel). An active additional smoke generator could be added if pre-tests will lead to inconclusive results on the water vapour effect on generated smoke because insufficient and unrealistic.

This test is considered as a test reference. The following physical parameters are measured in the near field of the jet fire: gas concentration, pressures, flow rate, heat fluxes are the main considering parameters.

3.4.5.3 Test N°2 – Unignited gas dispersion in a tunnel

This test aims at characterizing the gas dispersion in a real tunnel. The measurements in real conditions will be compared and validated with CFD simulations results. Moreover, this test will prepare test « delayed ignition of hydrogen cloud » N°2 of sub-task 4.4-1.

During this test, there will not be obstacles around the TPRD. The ventilation system is shut off and Helium could replace hydrogen for safety reason.

The Helium jet is realised from a TPRD mounted as in test N°1 (i.e. downwardly oriented and stand alone in main tunnel axis). This test is conducted without fire (an additional smoke maker could be added if pre-tests showed the necessity).

The measured physical parameters on a near field as the near field of the release are: gas concentration (He, O_2), flow rate, pressures, temperatures and BOS (Background-Oriented Schlieren) tools.

3.4.5.4 Test N°3 – Characterization of a single fire as test 1

This test aims to characterise the single fire source representing a vehicle fire in the nominal tunnel configuration.

During this test, the operating condition are the same as test 1. Furthermore, the ventilation of the tunnel is on and no obstacle is present around the fire and no hydrogen gas is released from the TPRD.

The following physical parameters should be measured in the near field: gas concentration (O_2, combustion by-products), pressures and heat fluxes.

3.4.5.5 Test N°4 – Jet fire / Test 1 without ventilation

This test aims to characterize the impacts of the ventilation and hydrogen ignited jet on the fire source.

During this test, the operating conditions are the same as tests 1 with the main difference: The ventilation of the tunnel is turned off.

The physical parameters should be measured in the near field of the jet fire and they should include gas concentration probes for O_2 and combustion by-products, pressure and heat fluxes sensors.

3.4.5.6 Test N°5 – Jet fire / Effect of TPRD orientation

This test aims to quantify the impact of TPRD orientation on fire AND the impact of hydrogen jet on tunnel structures.

During this test, the operating conditions are the same as in test 1. It is conducted with hydrogen. The ventilation of the tunnel is active and TPRD venting is upwardly oriented, towards the top of the tunnel.

The physical parameters that should be measured in the near field are gas concentration, pressures, heat fluxes.

3.4.5.7 Test N°6 – Jet fire / Reproducibility of test 1

This test aims to verify the reproducibility of the reference test N°1 and validate the results of test 1 with the same instruments.

The test closes the campaign of jet fire test. Furthermore, it will confirm that the instruments are operable before explosion tests explosion in WP 4.4.

During this test, the operating conditions are the same as test 1.

3.4.5.8 Synopsys

The table below sums up and compare the defined tests carried out by CEA in the real tunnel. The matrix shows how the different tests may combine to assess the effect of insulated parameters on the accident consequences, i.e ventilation in a tunnel, TPRD activation, etc. Table 25 includes the experiments that will be conducted in WP4, aimed at representing the scenario of the lack of TPRD activation and failure of the hydrogen storage tank.

Table 25. Synopsis and comparison of CEA tests in real tunnel.

Test N°	0	1	2	3	4	5	6	7	8	9A	9B	10	11	12
0	-													
1	Device control													
2	Jet fire	Real dispersion												
3	Jet fire	Isolate fire properties	-											
4	Jet fire	Ventilation impact	-	Impact of H_2 jet on fire										
5	Jet fire	TPRD orientation impact (up)	-	TPRD orientation impact (up)	-									
6	Jet fire	Second test reproducibility	Gas nature	-	Ventilation impact	-								
7	Explosion		Hydrogen could be replaced by N_2 or He?											
8	Explosion	-	-	-	-	-	-	Role of H_2 on combustion						
9A	Explosion	-	-	-	-	-	-	Similiraty and scalability	-					
9B	Non Explosion	-	-	-	-	-	-	-	-	Technology effect				
10	Explosion	-	-	-	-	-	-	-	-	-	-			
11	Explosion	-	-	-	-	-	-	-	-	-	Vehicle effect	Vehicle effect		
12	Explosion	Delayed explosion	-	-	-	Delayed explosion	-	-	-	-	-	-	-	

The experimental campaign will follow the timeline indicated in Table 26.

Table 26. Timeline of the experimental campaign conducted within sub-task 3.4.5.

Experimental campaign timeline	Month due	Report at project meeting (PM)
(1) Preparing the pre-test campaign	M11	3rd PM - Feb '20 (M12)
(2) Results of preliminary pre-tests campaign	M19	4th PM - Sep '20 (M19)
(3) Preparing the test campaign	M19	4th PM - Sep '20 (M19)
(4) Intermediate results	M23	5th PM - Feb '21 (M24)
(5) Final results	M31	6th PM - Sep '21 (M31)

3.4.6 Sub-task 3.4.6. Effect of water sprays on mitigation of hydrogen jet fires (PS)

The aim of this task is to investigate the efficiency of water sprays to suppress combustion of and radiation from hydrogen jet fire.

3.4.6.1 Facility

The experiments will be performed in the safety vessel V220 (A2), shown in Figure 9. The safety vessel with an inner diameter di = 6 m and a height h = 8 m provides a volume of 220 m^3. It is designed for a static overpressure of 11 bar and temperatures up to 150 ^oC. The vessel is equipped with numbers of vents and ports and windows for optical access. The largest two flanges with an inner diameter di = 1890 mm are parallel and located near the ground.

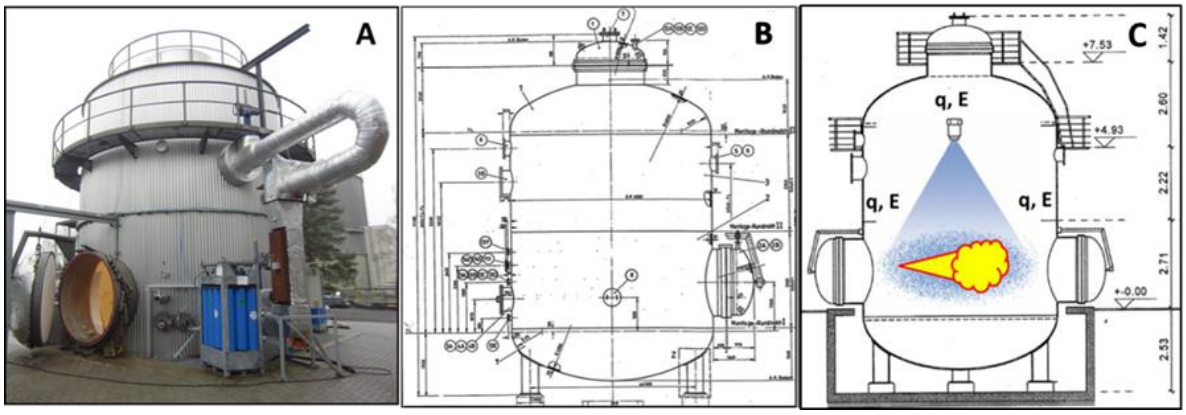

Figure 9. A) Safety vessel V220 (A2) of HYKA, B) Technical drawing, C) Sketch of the set up for suppression tests of water spray on hydrogen jet fires.

The facility for the investigation of the efficiency of water sprinkler systems to suppress a jet fire, shown in Figure 10, is placed inside the safety vessel. The jet facility will be the same as described in D2.1 "Detailed research programme on unignited leaks in tunnels and confined space" (sub task 2.4.4). On the top of the safety vessel a water spray system will be installed, as shown in Figure 9-C.

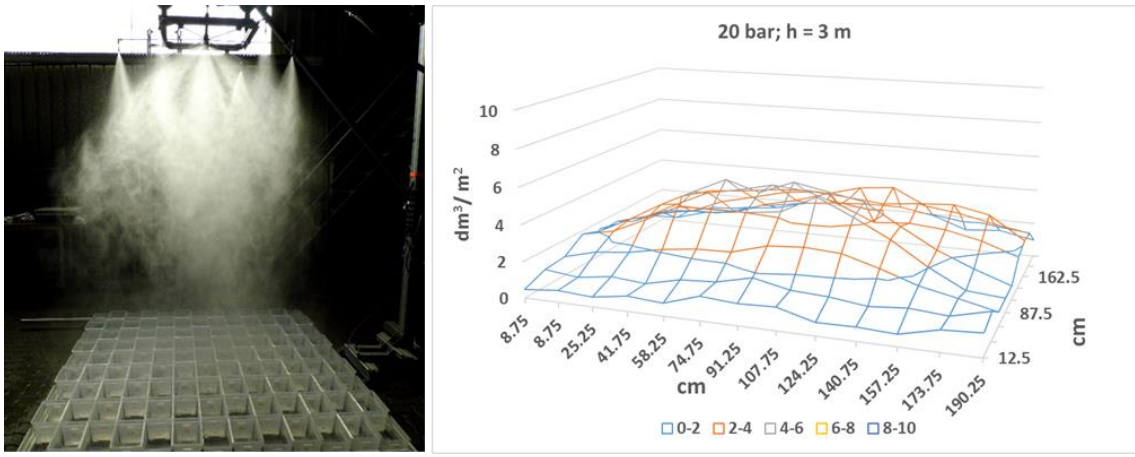

Figure 10. Pre-tests of a water spray: Left, droplet cloud from mist dominated 13 nozzle system. Right, corresponding uniformity of H2O-charging on the ground.

The water spray system is characterized by the design of the release nozzle and the water supply pressure. Two different release nozzle designs will be investigated: a mist dominated and a droplet dominated water spray system. The final selection of the nozzle design is in process. Figure 10 shows pre-tests of a mist dominated 13 nozzle water sprinkler system (left) and the corresponding uniformity of H_2O-charging on the ground (right). The equipment, sensors, igniter und optical systems will be prepared and tested to operate properly in wet atmosphere.

3.4.6.2 Test matrix

The tests on the effect of water sprinklers on hydrogen jet fires mitigation will be performed in the facility of V220 (A2). The designed test cases are summarized in Table 27. For each of the test and parameters combination is indicated an identification number. In total 48 tests will be conducted. The release nozzle will be changed from 1 to 4 mm. For each release diameter, a hydrogen mass flow rate of 1 and 5 g/s will be investigated. The mist and spray water systems will be tested for different intervention timings of the fire suppression systems: prior, after and at the hydrogen jet ignition time. Additional to the listed experiments in Table 27, the jet fire will be investigated without the presence of water.

Table 27. Test matrix of water spray on hydrogen jet fires.

H_2 jet nozzle id	1 mm								4 mm							
H_2 mass flow rate, g/s	1				5				1				5			
Mist or Spray	Mist		Spray		Mist		Spray		Mist		Spray		Mist		Spray	
Water mass flow rate, kg/min	low	high	low	high	low	high	low	high	low	high	low	high	low	high	low	high
Spray starts before ignition	1	4	7	10	13	16	19	22	25	28	31	34	37	40	43	46
Spray starts at ignition time	2	5	8	11	14	17	20	23	26	29	32	35	38	41	44	47
Spray starts after ignition	3	6	9	12	15	18	21	24	27	30	33	36	39	42	45	48

3.4.6.3 Measurements

Radiative heat flux measurements are planned and temperatures in the core region of jet fire are measured by approximately 10 thermal couples. Alternative different optical imaging systems will be used to capture the interaction process between jet fire and water injection.

3.4.6.4 Results

The question of how efficient the water injection is to suppress hydrogen jet fire is to be answered. It will also be proved whether a jet fire may be distinguished by water spray or mist or not. The results of the experimental campaign are expected to be ready in M31, as indicated in Table 28. Time schedule of the experimental campaign in sub-task 3.4.6.Table 28.

Table 28. Time schedule of the experimental campaign in sub-task 3.4.6.

Experimental campaigns timeline	Month due	Report at project meeting (PM)
Conclusion of the experimental campaign and results	M31	6th PM - Sep '21 (M31)

4. Conclusions

Deliverable D3.1 was presented. A detailed and comprehensive activity plan and schedule for the activities has been established in accordance to the project description attached to the Grant Agreement no. 826193 for HyTunnel-CS. Focus has been on the coordination of the various activity within WP 3 as well as coordination with relevant activities in the other work packages. The detailed programme combines the development and validation of engineering models and advanced CFD applications with state of the art experiments. By that the outcome is expected to support and advance risk assessment and decision support related to standardisation and regulation of hydrogen vehicles and bulk hydrogen transport through European tunnels and confined spaces as e.g. car parks.

5. References

Baker, W.E., Cox, P.A., Westine, P.S., Kulesz, J.J., Strehlow, R.A. (1983) Explosion hazards and evaluation. Elsevier Scientific Publishing Company.

Breitung, W., Stern, G., Veser, A., Friedrich, A., Kutznetsov, M., Fast, G., Oechsler, B., Kotchourko, N., Travis, J.R., Xiao, J., Schwall, M., Rottenecker, M. (2009) Experimental and theoretical investigations of sonic hydrogen discharge and jet flames from small breaks. Final report.

Brennan, S., Makarov, D., Molkov, V. (2010) Dynamics of flammable hydrogen-air mixture formation in an enclosure with a single vent, in: Proceedings of the 6th International Seminar on Fire and Explosion Hazards. Leeds.

Brennan, S., and Molkov. V. (2018) Pressure Peaking Phenomenon for Indoor Hydrogen Releases. International Journal of Hydrogen Energy 43(39):18530–41.

Herholdt, A.D., Justesen C.F.P et al. (2010) Betonbogen, Aalborg Portland

Hussein, H.G., Brennan, S., Shentsov, V., Makarov, D., Molkov, V. (2018) Numerical validation of pressure peaking from an ignited hydrogen release in a laboratory-scale enclosure and application to a garage scenario. International Journal of Hydrogen Energy 43, 17954–17968.

LaFleur, C., Bran-Anleu, G., Muna, A. B., Ehrhart, B. D., Blaylock, M., Houf, W. G. (2017) Hydrogen fuel cell electric vehicle tunnel safety study. SANDIA REPORT. SAND2017-11157. Unlimited Release. Printed October 2017.

Magnussen, B.F., Hjertager, B.H. (1977) On mathematical modeling of turbulent combustion with special emphasis on soot formation and combustion. Presented at the Symposium (international) on Combustion, Elsevier, pp. 719–729.

Makarov, D., Shentsov, V., Kuznetsov, M., Molkov, V. (2018) Pressure peaking phenomenon: Model validation against unignited release and jet fire experiments. International Journal of Hydrogen Energy. Pergamon, 43 (19), 9454–9469.

Modest, M.F. (2013) Radiative heat transfer. Academic press.

Molkov, V., Makarov, D. and Bragin, M. V. (2009) Physics and modelling of underexpanded jets and hydrogen dispersion in atmosphere. Physics of Extreme States of Matter, 146–149.

Molkov, V. and Saffers, J. (2011) The Correlation for Non-Premixed Hydrogen Jet Flame Length in Still Air, *Fire Safety Science* 10, 933–943.

Molkov, V (2012) Fundamentals of Hydrogen Safety Engineering I, download free book at bookboon.com.

Murthy, J. Y. and Mathur, S. R. (1998) A finite volume method for radiative heat transfer using unstructured meshes. J. Quant. Spectrosc. Radiat. Transf., vol. 12, no. 12, 313–321.

Sørensen, L.S. (2014) Fire-Safety Engineering, Polyteknisk Forlag

Appendix 1. Milestone 5: matrix of experiments, simulations, schedule of tools development

Milestone 5 (M3.1) presents the matrix of the activities and planning of the a) engineering tools development to be performed within task 3.2 b) numerical simulations to be performed within task 3.3 and c) experiments to be performed within task 3.4. The document was prepared and delivered in M6 (August 2019). The milestone was uploaded on the website members area as mean of verification. The milestone is reported as well as part of D3.1, following the directives of the Grant Agreement.

A1.1 Schedule of engineering tools development within Task 3.2 (UU)

Analytical studies and engineering tools details	Planned date	Report at Project Meeting (PM):	Report in deliverable (M):
SUBTASK 3.2.1. PPP correlation for jet fires (UU) The model has been developed and partially validated against small scale experiments. Validation against large-scale experimental data obtained in Sub-task 3.4.1 is planned in this activity. (1) Problem formulation and model description; (2) The modelling tool implementation on e-laboratory platform of NET-Tools project; (3) Validation of the tool against experimental data available in (Makarov et al., 2018); (4) Validation of the tool against HyTunnel-CS experimental data to be performed at USN (Sub-task 3.4.1); (5) Final results of the tool performance and validation described for stakeholders use.	M12 (v.1) M30 (v.2)	3rd PM - February '20 - M12 6th PM - September '21 - M31	D3.2. Intermediate report (M18) D3.3. Final report (M36)
SUBTASK 3.2.2. Fire suppression by water sprays and O_2 depletion (KIT) • Lump parameter codes or even zero-dimensional computer programs like CANTERA will be applied together with thermal-dynamic property library of gas like NIST tables, to make rough estimation about the needed quantity of water to suppress a given hydrogen fire in certain scenarios e.g., hydrogen fire caused by a passenger H2-Vehicle or a heavy goods vehicle. • However, the obtained results have to be multiplied by certain factors by considering the inefficiency of water spray suppression based on existing experimental data, because the turbulence produced by spray can intensify the hydrogen combustion in some circumstance according the nuclear safety research. Similar zero-dimensional analyses will be performed to identify characters of hydrogen combustion in oxygen depletion conditions, such as, the change of flammability, thermal-dynamic combustion properties as functions of time	M30	6th PM - September '21 - M31	D3.3. Final report (M36)
SUBTASK 3.2.3. Mechanical ventilation of hydrogen jet fire in underground parking (UU) This engineering tool will be developed along with a tool to assess mechanical ventilation in an underground parking for unignited releases (Task 2.2). In the scenario involving an ignited release, a vehicle fire may be aggravated by the heat release rate			

of the hydrogen jet fire. On the other hand, the water vapour produced by the hydrogen-air combustion may act as an extinguishing agent. The engineering tool will help to assess if the current ventilation standards for underground parking in case of a vehicle fire is still applicable in the event of hydrogen jet fire from a vehicle TPRD, or the hydrogen jet fire will aggravate the vehicle fire hazards. This latter eventuality depends on the ventilation parameters imposed in the enclosed space and hydrogen release rate through the TPRD. The model will be based on balance between the volume of gas consumed and produced by the hydrogen combustion, the volume of hydrogen immitted by the TPRD and the volume of gas exchanged through the ventilation system. The model will require as input parameters: ▪ TPRD/leak release temperature, pressure, diameter and mass flow rate; ▪ Vehicle fire heat release rate and combustion products volume, if applicable; ▪ Ventilation rate; ▪ Enclosure/Confined space volume. The engineering tool can be used in two ways: to provide as outputs either the required ventilation parameters for a certain vehicle TPRD release or the maximum mass flow rate through a vehicle TPRD to fulfill the ventilation requirements. The engineering tool will be developed and applied in three versions (v):			
(v.1) Problem formulation and tool implementation;	M12 (v.1)	3rd PM - February '20 - M12	D3.2. Intermediate report (M18)
(v.2) Validation of the tool against USN experiments within Task 3.4.2 (expected M29), including final description of the tool for stakeholders' use;	M31 (v.2)	7th PM - February '22 - M36	D3.3. Final report (M36)
(v.3) Use of the engineering tool to assess the applicability of current ventilation standards.	M32 (v.3)	7th PM - February '22 - M36	D3.3. Final report (M36)

A1.2 Matrix of numerical simulations within Task 3.3 (NCSRD)

Numerical studies details	Planned date	Report at Project Meeting (PM):	Report in deliverable (M):
SUBTASK 3.3.1. Pressure Peaking Phenomenon CFD model (UU) The CFD model to predict pressure peaking phenomenon for hydrogen jet fire in confined space was developed in Hussain et al. (2018) and validated for small-scale experiments. Here, it will be validated against experiments performed by USN within Task 3.4 (M29) on large scale scenarios. The current CFD model is based on RANS modelling of turbulence and Eddy Dissipation Concept for combustion. The reasons to have a validated CFD model together with an engineering tool are the following: ▪ to simulate those scenarios that cannot be represented by the engineering tool simplifying assumptions; ▪ to expand range of applicability of the engineering model by using simulations as verification tool; ▪ to calculate the thermal load on the enclosure surfaces; ▪ to calculate hazard distances based on pressure and thermal effects in the external surroundings of the enclosure.	M35	7th PM - February '22 - M36	D3.3. Final report (M36)
SUBTASK 3.3.2. Fire in ventilated underground parking (NCSRD) • Further development of ADREA-HF code for jet fires and radiation • Validation simulations against URS experiments Tests are carried out in collaboration between URS and the Italian National Fire Corps (in-kind contribution from Italian National Fire Corps). The jet fire experiments are performed at hydrogen pressures up to 450 bar and nozzle diameters ∅1-5 mm to evaluate the hazard distance and to test the mode of action of extinguishing powder.	M22	5th PM - February '21 - M24	D3.3. Final report (M36)
SUBTASK 3.3.3. CFD/FEM modelling of fires effect on structures (DTU, UU) DTU will perform coupled CFD/FEM analysis on structural response of steel elements. This work will require input from 3.3.1 and 4.3. ▪ thermal load ▪ compression /pressure loads	M22 M35	5th PM - February '21 - M24 7th PM - February '22 - M36	D3.3. Final report (M36)
UU will assist DTU in FEM analysis of structural response of steel elements in tunnels to thermal and pressure loads providing input from CFD simulations of both free and impinging jet fires. (v.1) Development of the CFD model	M17 (v.1)	4th PM - September '20 - M19	

(v.2) CFD model validation against the experimental tests performed by DTU (Task 3.4.3)	M32 (v.2)	7th PM - February '22 - M36	D3.3. Final report (M36)
SUBTASK 3.3.4. Fire spread scenarios in underground spaces (DTU) DTU will develop a CFD model to investigate the influence of hydrogen releases to fire spread scenarios in underground transportation systems (car parks)	M12 (v.1) M24 (v.2)	3rd PM - February '20 - M12 5th PM - February '21 - M24	D3.3. Final report (M36)

A1.3 Matrix of experiments within Task 3.4 (CEA)

Experiments details	Planned date	Report at Project Meeting (PM):	Report in deliverable (M):
SUBTASK 3.4.1. Pressure Peaking Phenomenon for hydrogen jet fires (USN) The experimental results will show pressure build-up in a closed compartment with small vent areas due to ignited hydrogen releases. The experiments will be done in two campaigns. (1) Releases in 15 m^3 volume with lower source pressure (can be reported in intermediate report). (2) Releases in 15 m^3 volume with 700 bar pressure source.	M16 M30	3rd PM - February '20 - M12 6th PM - September '21 - M31	D3.2. Intermediate report (M18) D3.3. Final report (M36)
SUBTASK 3.4.2. TPRD fire effect on vehicle, structure and evacuation (USN) (1) Detailed experimental series finalized before M21. The results will show the effect of typical ventilation rates on the fire spread from ignited accidental releases of hydrogen in parking systems. Details will be on release rates and ventilation rates, obstructions and release direction. Temperature and heat fluxes on the walls and obstructions will be measured. The experiments will be performed in 40' ISO-container with forced ventilation from jet-fan. (2) Experimental results obtained before summer 2021.	M21 M30	5th PM - February '21 - M24 6th PM - September '21 - M31	D3.3. Final report (M36)
SUBTASK 3.4.3. Fire effect on structure integrity and concrete spalling (DTU) (1) Laboratory scale tests on different concrete (2) Large scale test together with USN	M16 M30	4th PM - September '20 - M19 6th PM - September '21 - M31	D3.3. Final report (M36)
SUBTASK 3.4.4. Fire effect on erosion of road materials and lining (HSE) Experimental test programme to examine ignited TPRD jet fire using a high pressure hydrogen supply vessels, initial pressure = 70 MPa, TPRD diameter = 4 mm: (1) Determine jet fire characteristics (temperature, pressure, flow velocity)	M15	4th PM - September '20 - M19	

(2) Expose 5 different tunnel material to high pressure jet fire, assessing material losses and internal thermal effects	M18	5th PM - February '21 - M24	D3.3. Final report (M36)
SUBTASK 3.4.5. Effect of TPRD fire on vehicle fire dynamics in tunnel (CEA) (1) Experimental series 1: 6 tests are scheduled to show the effect of typical orientation of the TPRD, presence or absence of forced ventilation and interaction (or not) with surrounding fire. Temperature and heat fluxes will be measured, IR recordings will be performed. Different concentration measurements will be done (CO_2, He, H_2….). The experiments will be performed in a real tunnel. Detailed experimental series validated before M12. (2) Experimental series 2: Preliminary experiments will be performed as well between January and May 2020 to test the equipment in a realistic environment in connection with work in Task 4.4. (3) Experimental series 3: Actual experiments are scheduled to be performed by the end of 2020 (probably October)	M12 M11-M15 (pre tests) M19	3rd PM - February '20 - M12 4th PM - September '20 - M19 5th PM - February '21 - M24	D3.2. Intermediate report (M18) D3.3. Final report (M36) D3.3. Final report (M36)
SUBTASK 3.4.6. Effect of water sprays on mitigation of hydrogen jet fires (PS) The scope of this work is to study the effect of water sprays on H_2 jet fires. The H_2-jet facility and its location will be the same as used in Sub-task 2.4.4. A sprinkler system will be install inside the safety vessel HYKA A2. The test side will be prepared to work under wet conditions. The experimental programme preparation will commence M10 and the whole programme is expected to be finalised M19. (1) Experimental series 1: Investigation and characterisation of the sprinkler system. Uniformity of H_2O-charging on the ground, variation of spray capacity. A water mist dominate sprinkler system is intended. Optional a droplet dominate sprinkler system is possible. (2) Experimental series 2: Investigation and characterisation of ignited free H_2 jets without water spray. Testing sensors und optical systems which are useable in wet atmosphere. (3) Experimental series 3: Investigation and characterisation of ignited free H_2 jets inside the water spray. Two cases: a) the water spray meets the ignited free H_2 jets, b) jet ignition in wet atmosphere.	M19 M19 M19	4th PM - September '20 - M19 4th PM - September '20 - M19 4th PM - September '20 - M19	D3.3. Final report (M36) D3.3. Final report (M36) D3.3. Final report (M36)

A1.4 WP3 activities timeline

			2019										2020												2021												2022	
			1	2	3	4	5	6	7	8	9	10	11	12	13	14	15	16	17	18	19	20	21	22	23	24	25	26	27	28	29	30	31	32	33	34	35	36
WP	**Task**	**Activities (Leader)**	3	4	5	6	7	8	9	10	11	12	1	2	3	4	5	6	7	8	9	10	11	12	1	2	3	4	5	6	7	8	9	10	11	12	1	2
3	1	MS3.1. Matrix of experiments, simulations, schedule of tools development (DTU)						MS																														
3	1	D3.1. Detailed research programme on hydrogen fires in confined structures (DTU)									D																											
3	2	Subtask 3.2.1. PPP correlation for jet fires (UU)																		D																		D
3	2	Subtask 3.2.2. Fire suppression by water sprays and O_2 depletion (KIT)																																				D
3	2	Subtask 3.2.3. Mechanical ventilation in underground parking (UU)																		D																		D
3	3	Subtask 3.3.1. Pressure Peaking Phenomenon CFD model (UU)																																				D
3	3	Subtask 3.3.2. Fire in ventilated underground parking (NCSRD)																																				D
3	3	Subtask 3.3.3. CFD/FEM modelling of fires effect on structures (DTU, *UU*)																																				D
3	3	Subtask 3.3.4. Fire spread scenarios in underground spaces (DTU)																																				D
3	4	Subtask 3.4.1. Pressure Peaking Phenomenon for hydrogen jet fires (USN)																		D																		D
3	4	Subtask 3.4.2. TPRD fire effect on vehicle, structure and evacuation (USN)																																				D
3	4	Subtask 3.4.3. Fire effect on structure integrity and concrete spalling (DTU)																																				D
3	4	Subtask 3.4.4. Fire effect on erosion of road materials and lining (HSE)																																				D
3	4	Subtask 3.4.5. Effect of TPRD fire on vehicle fire dynamics in tunnel (CEA)																		D																		D
3	4	Subtask 3.4.6. Effect of water sprays on mitigation of hydrogen jet fires (PS)																																				D
3	5	MS3.2. Initial results of experimental, analytical and numerical studies (DTU)																		MS																		
3	5	D3.2. Intermediate report on analytical, numerical and experimental studies on fires (DTU)																		D																		
3	5	MS3.3. Results of experimental, analytical and numerical studies for final report (DTU)																																	MS			
3	5	D3.3. Final report on analytical, numerical and experimental studies on fires, including (DTU)																																				D

	Summer months
	Planned date

A1.5 References

Hussein, H.G., Brennan, S., Shentsov, V., Makarov, D., Molkov, V., 2018. Numerical validation of pressure peaking from an ignited hydrogen release in a laboratory-scale enclosure and application to a garage scenario. International Journal of Hydrogen Energy, Volume 43, Issue 37, 17954-17968.

Makarov, D., Shentsov, V., Kuznetsov, M., Molkov, V., 2018. Pressure peaking phenomenon: Model validation against unignited release and jet fire experiments. Int. J. Hydrog. Energy 43, 9454–9469. https://doi.org/10.1016/j.ijhydene.2018.03.162